AXOR

AXOR Starck
Semi-Pro Kitchen Faucet 2-Spray, 1.75 GPM
Finishes : Part no. : **10820251**

Features

- Swivel range 360°
- Laminar spray, needle spray
- Toggle spray diverter
- Deck mounted
- Flow: 1.75 GPM (6.6 L/Min)
- Joystick ceramic cartridge
- ⅜" connections
- Integrated double backflow prevention

Item details

List Price

Technology

Quick Clean

Compliance

UPC

Product image
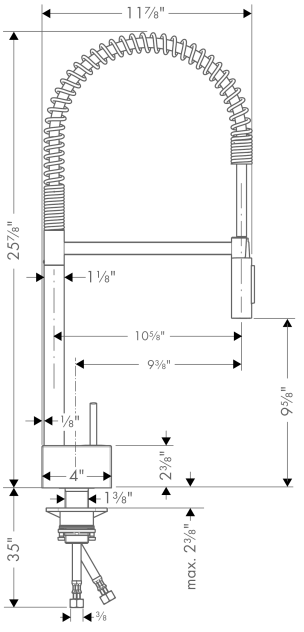
Scale drawing