NOTES:

(N1) 1. FIT / FORM / FUNCTION SHALL FOLLOW PS-E.008.

2. PUT THESE ITEMS IN SEPARATE PLASTIC BAGS.

3. TORQUE TO 7.5-8.5 LB-FT.

4. APPLY THIN COAT OF SILICON GREASE FOR ALL O-RINGS BEFORE INSTALLATION.

5. APPLY LOCTITE 242, IF SCREW DOES NOT HAVE NYLON PATCH.

6. APPLY LOCTITE 680.

7. APPLY SILICONE GREASE 10" FROM OUTLET OF PN 11877A

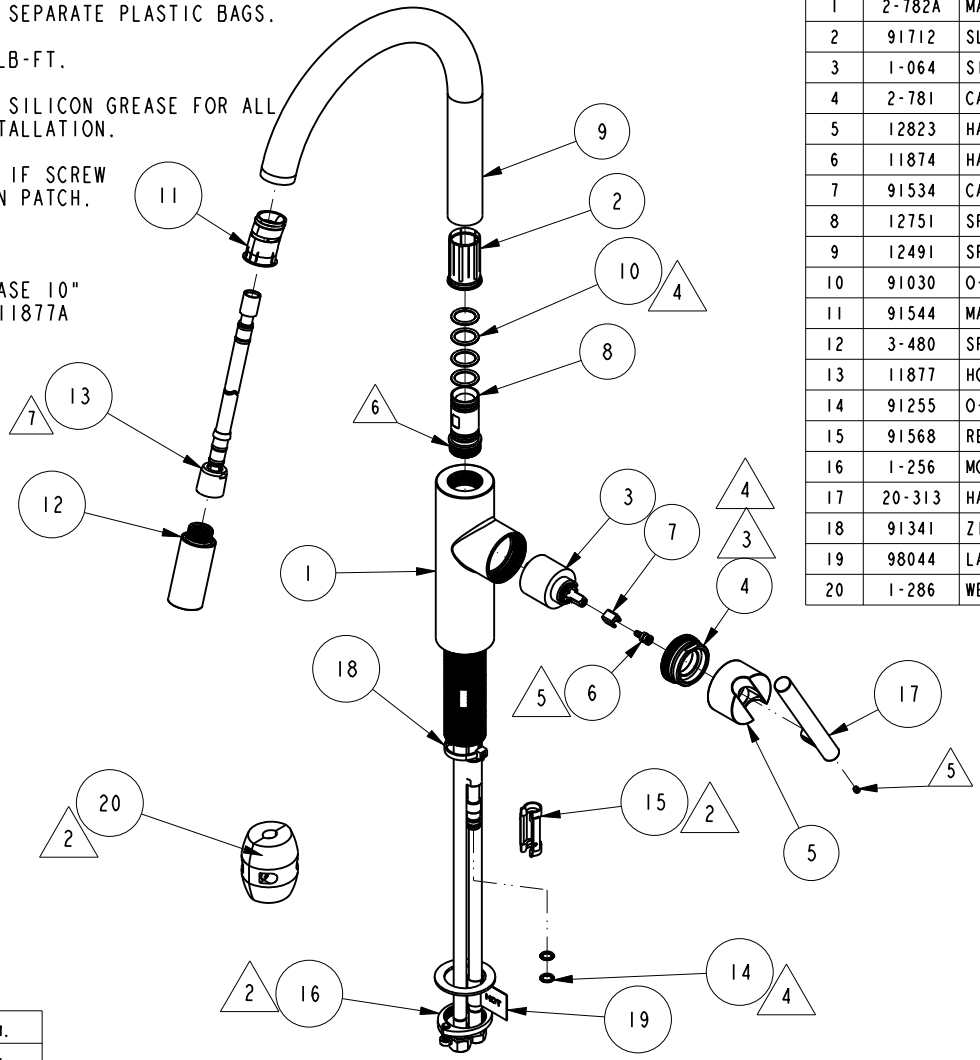

BILL OF MATERIAL (CURRENT LEVEL)

ITEM	PT/ASSY	DESCRIPTION	TYPE	QTY.
1	2-782A	MAIN BODY ASM, EAST LINEAR	ASSEMBLY	1
2	91712	SLEEVE	PART	1
3	1-064	SINGLE LEVER CARTRIDGE	PART	1
4	2-781	CART. RETAINER ASM	ASSEMBLY	1
5	12823	HANDLE HUB	PART	1
6	11874	HANDLE ADAPTER SCREW	PART	1
7	91534	CARTRIDGE STEM INSERT	PART	1
8	12751	SPOUT ADAPTER	PART	1
9	12491	SPOUT	PART	1
10	91030	O-RING, #2- 115, EPDM, 65-75 DURO, NSF 61	PART	4
11	91544	MAGNET DOCKING	ASSEMBLY	1
12	3-480	SPRAY HEAD, EAST LINEAR	ASSEMBLY	1
13	11877	HOSE, PULLDOWN SWIVEL	ASSEMBLY	1
14	91255	O-RING, #2- 011, EPDM, 65-75 DURO,NSF-61	PART	2
15	91568	RETAINER CLIP	PART	1
16	1-256	MOUNTING KIT	ASSEMBLY	1
17	20-313	HANDLE LEVER ASM	ASSEMBLY	1
18	91341	ZIP TIE	PART	1
19	98044	LABEL - HOT	PART	1
20	1-286	WEIGHT ASM	ASSEMBLY	1

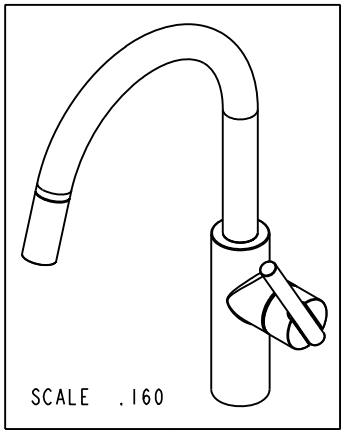

George Bazan
Digitally signed by George Bazan
Date: 2020.01.22 09:55:24 -08'00'

ZONE	REV	DESCRIPTION	DATE	APPROVED
-	G	EN-4051	01/17/20	J.M.
-	F	EN-3931B	09/06/19	V.V.
-	E	EN-3539B	09/06/19	V.V.
-	D	EN-3413j	06/19/18	J.A.
-	C	EN-3413c	01/10/18	J.M.
-	B	EN-3034L	09/11/17	J.A.
-	A	EN-3034	04/07/17	J.A.
-	-	EN-2682	03/17/14	-

COPYRIGHT 2005 BRASSTECH, INC. THESE DRAWINGS AND THE DESIGNS DEPICTED HEREIN ARE THE PROPRIETARY PROPERTY OF BRASSTECH. ANY USE OR REPRODUCTION IS SUBJECT TO THE EXPRESS APPROVAL OF BRASSTECH. UNAUTHORIZED USE IS STRICTLY PROHIBITED. ALL RIGHTS RESERVED.

		-	-
TESTING	-	-	-
ASSEMBLY	-	-	-
PLATING	-	-	-
POLISHING	-	NEXT ASSY	USED ON
MACHINING	-	APPLICATION	
TOOLING FIXTURE #		REMOVE ALL BURRS AND SHARP EDGES	

UNITS ARE: INCHES [MM]
TOLERANCES ARE:
FRACTIONS ±1/16" DECIMALS .X ±.1 [2,5] .XX ±.06 [1,5] ANGLES ±1°
(X.XXX) DENOTES CRITICAL DIMS.
ALL THREADS ARE CRITICAL

DRAWN	JINSON	09/06/19
CHECKED	J.M.	09/06/19
APPROVED	J.M.	09/06/19

BRASSTECH INCORPORATED
2001 CARNEGIE AVE.
SANTA ANA, CA 92705
(949) 417-5207

EAST LINEAR PULL DOWN - KITCHEN FAUCET

DWG NO. 1500-5113 REV G

SCALE .160 REF. SHEET 1 OF 2

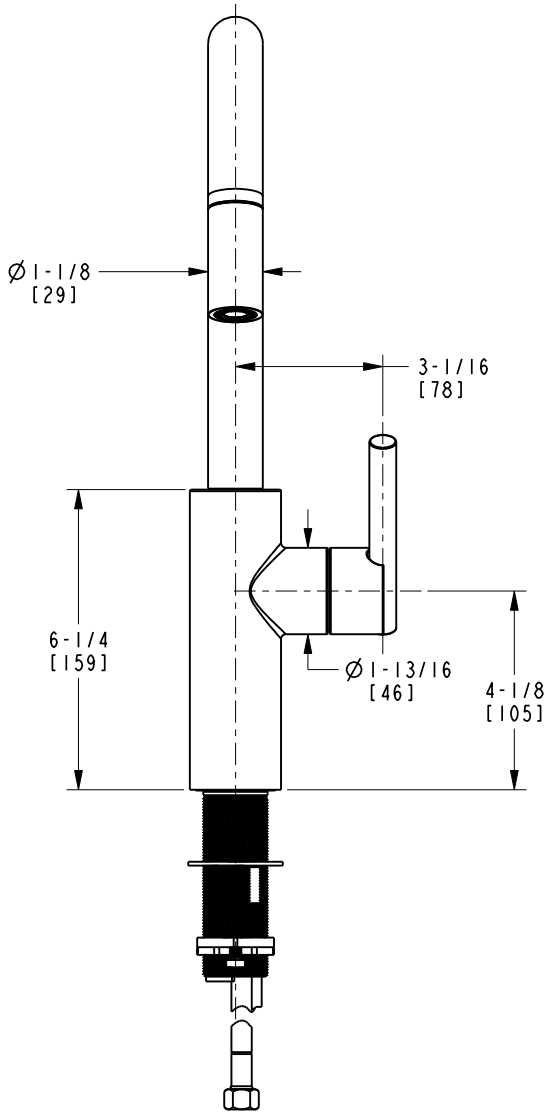

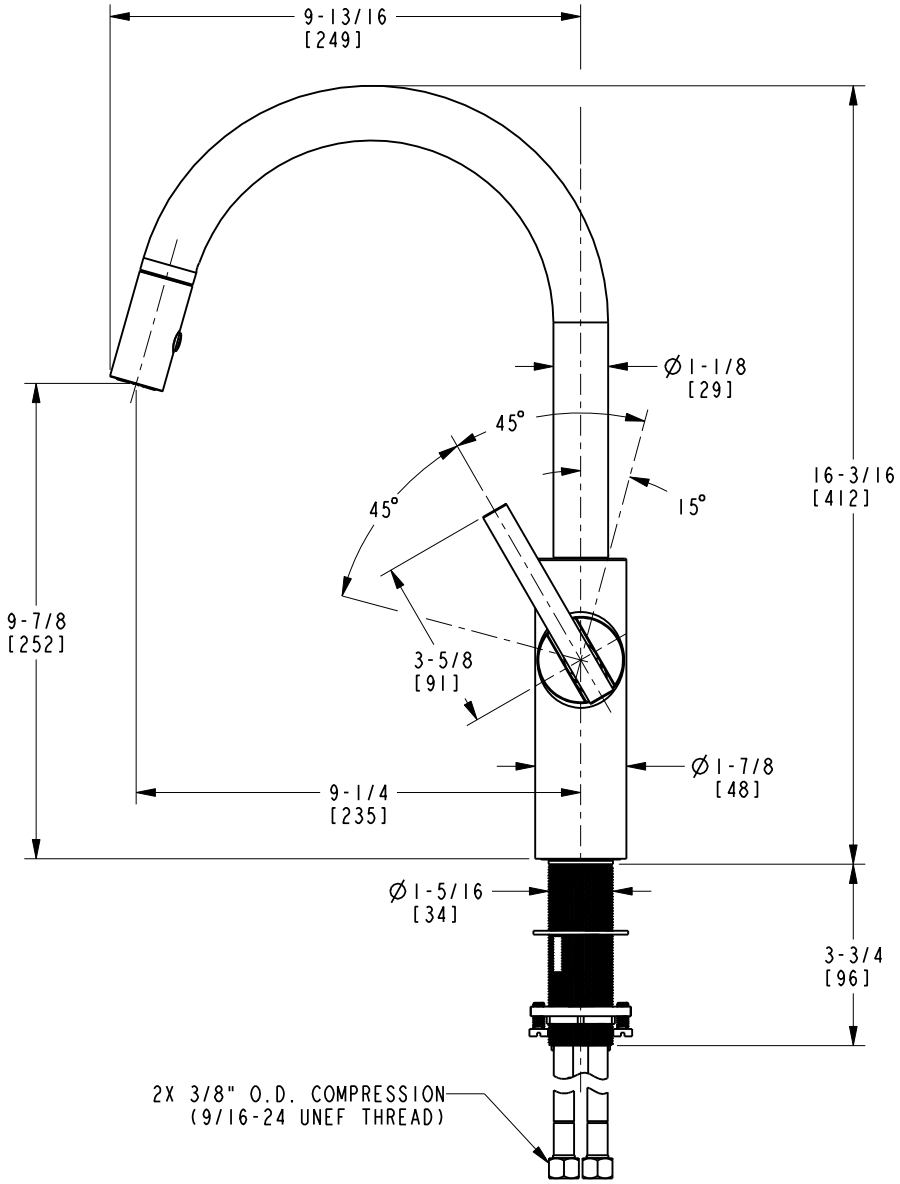

BRASSTECH INCORPORATED

2001 E. CARNEGIE AVE.
SANTA ANA, CA 92705
(949) 417-5207

DWG NO.	REV
1500-5113	G

SCALE .250	REF.	SHEET 2 OF 2