NOTES:

(N1) 1. FIT / FORM / FUNCTION SHALL FOLLOW PS-E.008.

2. PUT THESE ITEMS IN SEPARATE PLASTIC BAGS.

3. APPLY LIGHT FILM OF DOW CORNING 111 SILICONE COMPOUND TO ALL O-RINGS PRIOR TO INSTALLATION.

4. APPLY LOCTITE 242, IF SCREW DOES NOT HAVE NYLON PATCH.

5. TORQUE 130-140 IN-LBS.

6. APPLY SILICONE GREASE 10" FROM OUTLET OF PN 11877.

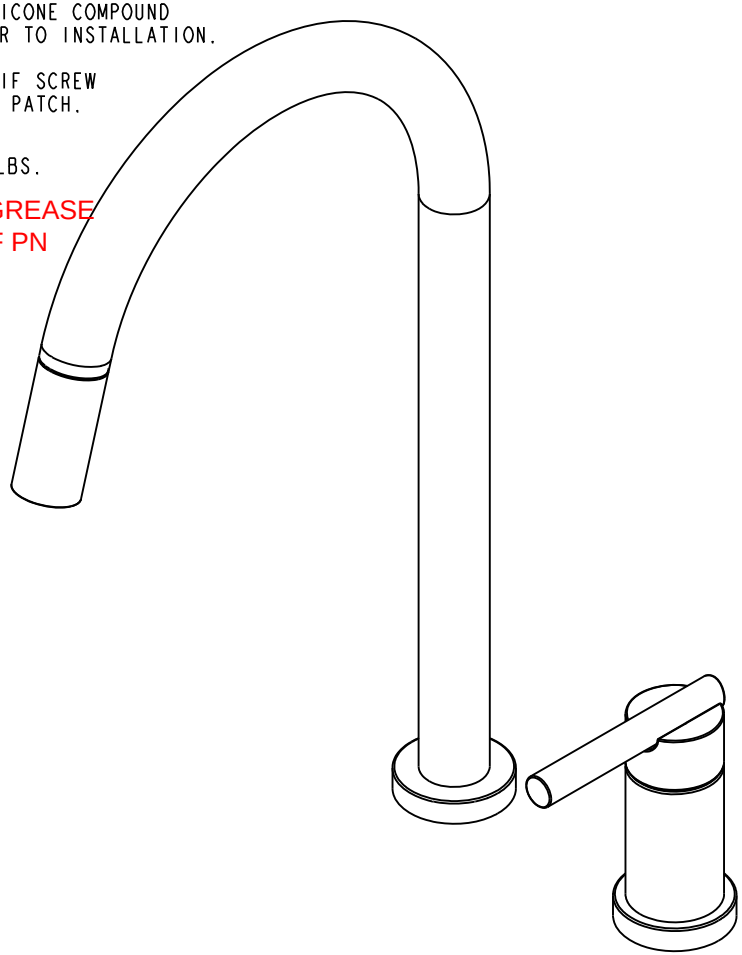

BILL OF MATERIAL (CURRENT LEVEL)

ITEM	PT/ASSY	DESCRIPTION	TYPE	QTY.
1	20-265	SPOUT BASE ASM	ASSEMBLY	1
2	91712	SLEEVE	PART	1
3	12671	ADAPTER EXTENSION	PART	1
4	91114	O-RING, #2- 116, EPDM, 65-75 DURO, NSF 61	PART	4
5	12668	SPOUT, PULLDOWN	PART	1
6	91544	MAGNET DOCKING	ASSEMBLY	1
7	3-480	SPRAY HEAD, EAST LINEAR	ASSEMBLY	1
8	11877	HOSE, PULLDOWN, GREY	ASSEMBLY	1
9	1-256	MOUNTING KIT	ASSEMBLY	2
10	20-390	ESCUTCHEON ASM	ASSEMBLY	1
11	20-236	MAIN BODY ASM	ASSEMBLY	1
12	1-371	CARTRIDGE	PART	1
13	91505	O-RING, #2-123, EPDM, 65-75 DURO	PART	1
14	12686	HANDLE HUB, CONTEMP	PART	1
15	91534	CARTRIDGE STEM INSERT	PART	1
16	11874	HANDLE ADAPTER SCREW	PART	1
17	20-389	HANDLE ASM	ASSEMBLY	1
18	91255	O-RING, #2- 011, EPDM, 65-75 DURO,NSF-61	PART	2
19	91568	RETAINER CLIP	PART	1
20	98044	LABEL - HOT	PART	1
21	1-286	WEIGHT	ASSEMBLY	1

Joe Manga
Digitally signed by Joe Manga
Date: 2019.09.27 13:31:02 -07'00'

J.R. 01/21/2020

ZONE	REV	DESCRIPTION	DATE	APPROVED
-	C	EN-3974	09/25/19	J.M.
-	B	EN-3931b	09/09/19	J.M.
-	A	EN-3739	11/09/18	J.M.
-	-	EN-3215	09/06/18	J.M.

COPYRIGHT 2005 BRASSTECH, INC. THESE DRAWINGS AND THE DESIGNS DEPICTED HEREIN ARE THE PROPRIETARY PROPERTY OF BRASSTECH. ANY USE OR REPRODUCTION IS SUBJECT TO THE EXPRESS APPROVAL OF BRASSTECH. UNAUTHORIZED USE IS STRICTLY PROHIBITED. ALL RIGHTS RESERVED.

TESTING	-	-	-
ASSEMBLY	-	-	-
PLATING	-	-	-
POLISHING	-	NEXT ASSY	USED ON
MACHINING	-	APPLICATION	
TOOLING FIXTURE #		REMOVE ALL BURRS AND SHARP EDGES	

UNITS ARE: INCHES [MM]
TOLERANCES ARE:
FRACTIONS ±1/16" DECIMALS .X ±.1 [2,5] .XX ±.06 [1,5] ANGLES ±1°
(X.XXX) DENOTES CRITICAL DIMS.
ALL THREADS ARE CRITICAL

DRAWN	JINSON	09/09/19
CHECKED	J.M.	09/09/19
APPROVED	J.M.	09/09/19

BRASSTECH INCORPORATED
2001 CARNEGIE AVE.
SANTA ANA, CA 92705
(949) 417-5207

2-HOLE 25MM PULLDOWN - EAST LINEAR

DWG NO. 1500-5123 REV C

SCALE .325 REF. - SHEET 1 OF 3

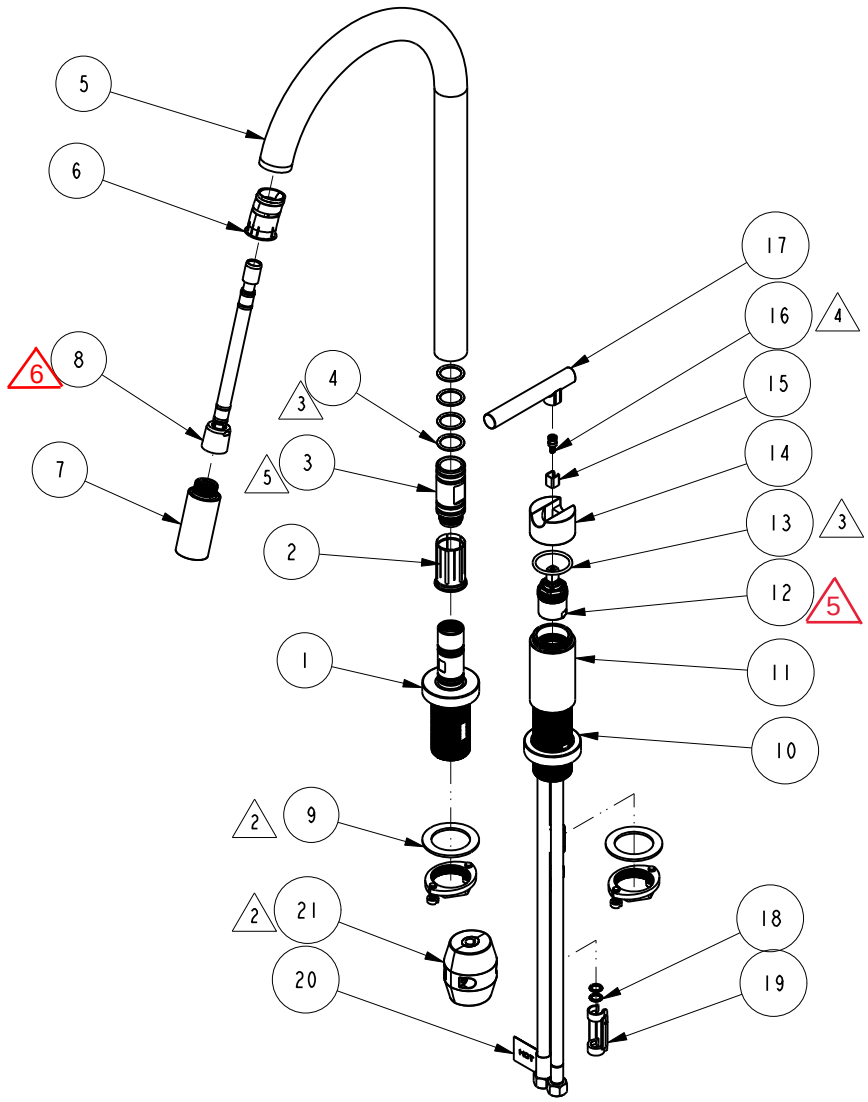

BRASSTECH INCORPORATED

2001 E. CARNEGIE AVE.
SANTA ANA, CA 92705
(949) 417-5207

DWG NO.	REV
1500-5123	C

SCALE	REF.	SHEET
.150	-	2 OF 3

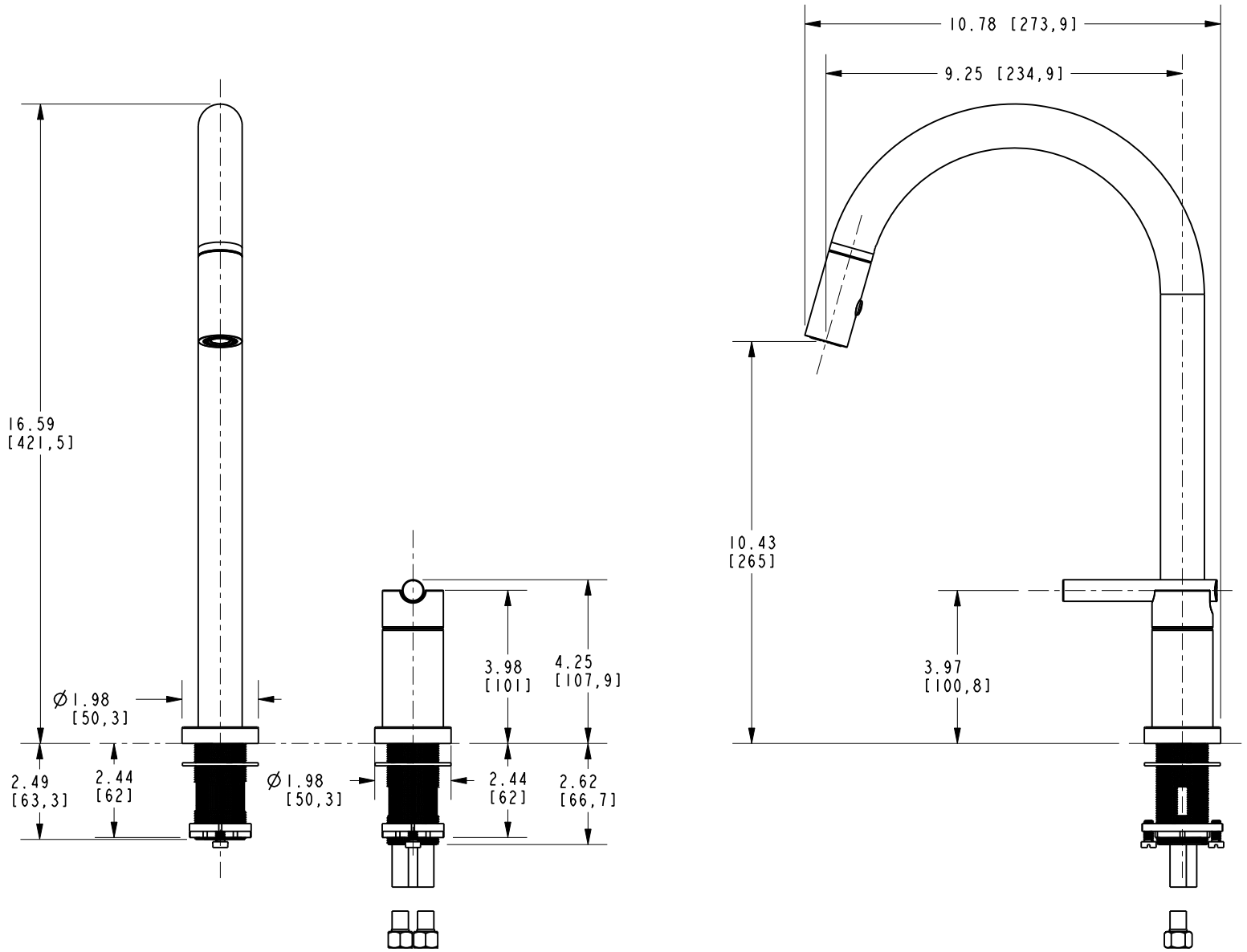

BRASSTECH INCORPORATED

2001 E. CARNEGIE AVE.
SANTA ANA, CA 92705
(949) 417-5207

DWG NO.	REV
1500-5123	C

SCALE	REF.	SHEET
.250	-	3 OF 3