NOTES:

(N1) 1. FIT / FORM / FUNCTION SHALL FOLLOW PS-E.008.

2. PUT THESE ITEMS IN SEPARATE PLASTIC BAGS.

3. APPLY THIN COAT OF SILICON GREASE FOR ALL O-RINGS BEFORE INSTALLATION.

4. TORQUE 130-140 IN-LBS.

5. APPLY LOCTITE 242.

6. APPLY LOCTITE 680.

7. APPLY SILICONE GREASE 10" FROM OUTLET OF PN 11877.

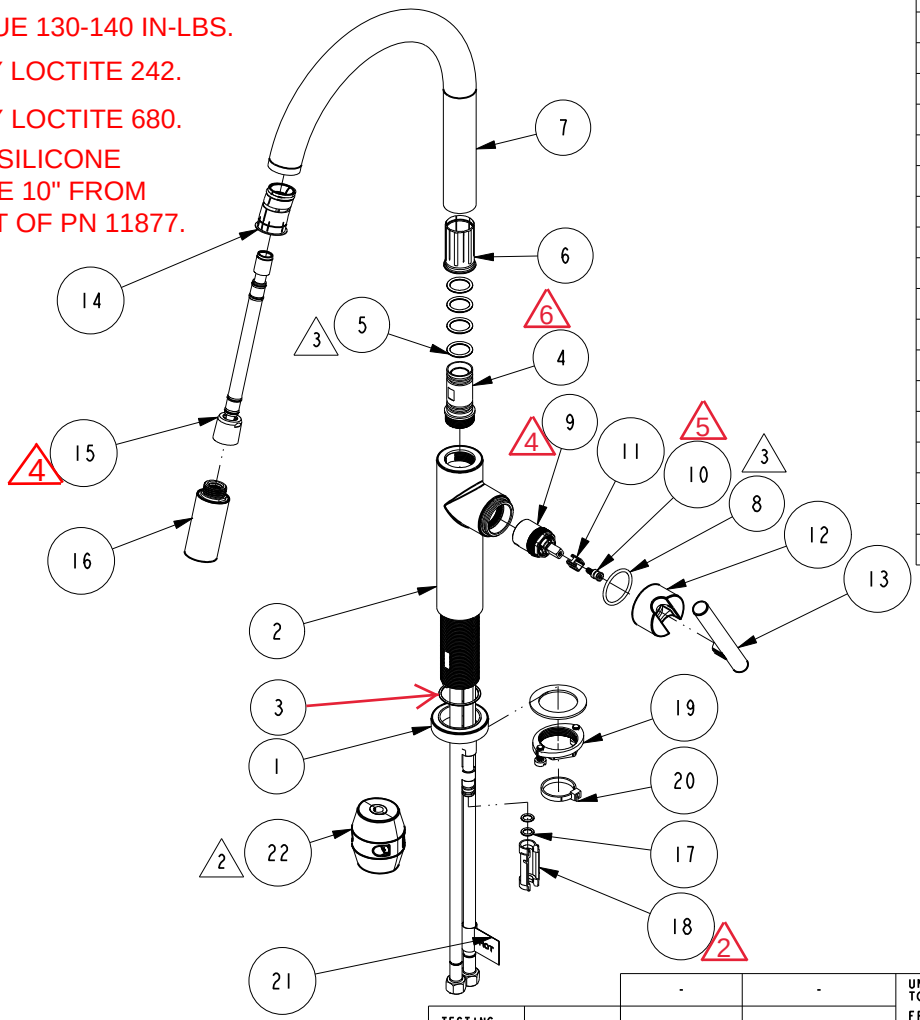

BILL OF MATERIAL (CURRENT LEVEL)

ITEM	PT/ASSY	DESCRIPTION	TYPE	QTY.
1	20-390	ESCUTCHEON ASM	ASSEMBLY	1
2	20-245	MAIN BODY ASM	ASSEMBLY	1
3	91764	O-RING, #2-027, EP, 50 DURO - GREY	PART	1
4	12751	SPOUT ADAPTER	PART	1
5	91030	O-RING, #2- 115, EPDM, 65-75 DURO, NSF 61	PART	4
6	91712	SLEEVE	PART	1
7	12491	SPOUT	PART	1
8	91505	O-RING, #2-123, EPDM, 65-75 DURO	PART	1
9	1-371	CARTRIDGE	PART	1
10	11874	HANDLE ADAPTER SCREW	PART	1
11	91534	CARTRIDGE STEM INSERT	PART	1
12	12686	HANDLE HUB, CONTEMP	PART	1
13	20-389	HANDLE ASM	ASSEMBLY	1
14	91544	MAGNET DOCKING	ASSEMBLY	1
15	11877A	HOSE, PULLDOWN, GREY	ASSEMBLY	1
16	3-480	SPRAY HEAD, EAST LINEAR	ASSEMBLY	1
17	91255	O-RING, #2- 011, EPDM, 65-75 DURO,NSF-61	PART	2
18	91568	RETAINER CLIP	PART	1
19	1-256	MOUNTING KIT	ASSEMBLY	1
20	91341	ZIP TIE	PART	1
21	98044	LABEL - HOT	PART	1
22	1-286A	WEIGHT	ASSEMBLY	1

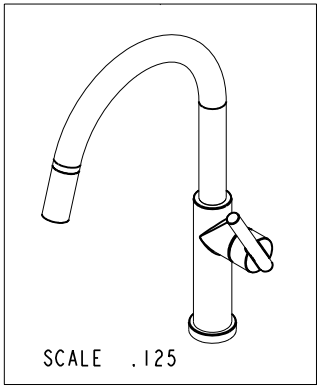

J.R. 01/21/2020

Juan Romo Digitally signed by Juan Romo Date: 2019.10.10 15:24:15 -07'00'

ZONE	REV	DESCRIPTION	DATE	APPROVED
-	B	EN-3931B	09/09/19	V.V.
-	A	EN-3722	09/09/19	C.G.
-	-	EN-3215	09/06/18	J.M.

COPYRIGHT 2005 BRASSTECH, INC. THESE DRAWINGS AND THE DESIGNS DEPICTED HEREIN ARE THE PROPRIETARY PROPERTY OF BRASSTECH. ANY USE OR REPRODUCTION IS SUBJECT TO THE EXPRESS APPROVAL OF BRASSTECH. UNAUTHORIZED USE IS STRICTLY PROHIBITED. ALL RIGHTS RESERVED.

TESTING	-	-	-
ASSEMBLY	-	-	-
PLATING	-	-	-
POLISHING	-	NEXT ASSY	USED ON
MACHINING	-	APPLICATION	
TOOLING FIXTURE #		REMOVE ALL BURRS AND SHARP EDGES	

UNITS ARE: INCHES [MM]
TOLERANCES ARE:
FRACTIONS ±1/16" DECIMALS .X ±.1 [2.5] .XX ±.06 [1.5] ANGLES ±1°
(X.XXX) DENOTES CRITICAL DIMS.
ALL THREADS ARE CRITICAL

DRAWN	JINSON	09/09/19
CHECKED	J.M.	09/09/19
APPROVED	J.M.	09/09/19

BRASSTECH INCORPORATED
2001 CARNEGIE AVE.
SANTA ANA, CA 92705
(949) 417-5207

SGL HL 25MM PULL DOWN - EAST LINEAR

DWG NO. 1500-5143 REV B

SCALE .150 REF. - SHEET 1 OF 2

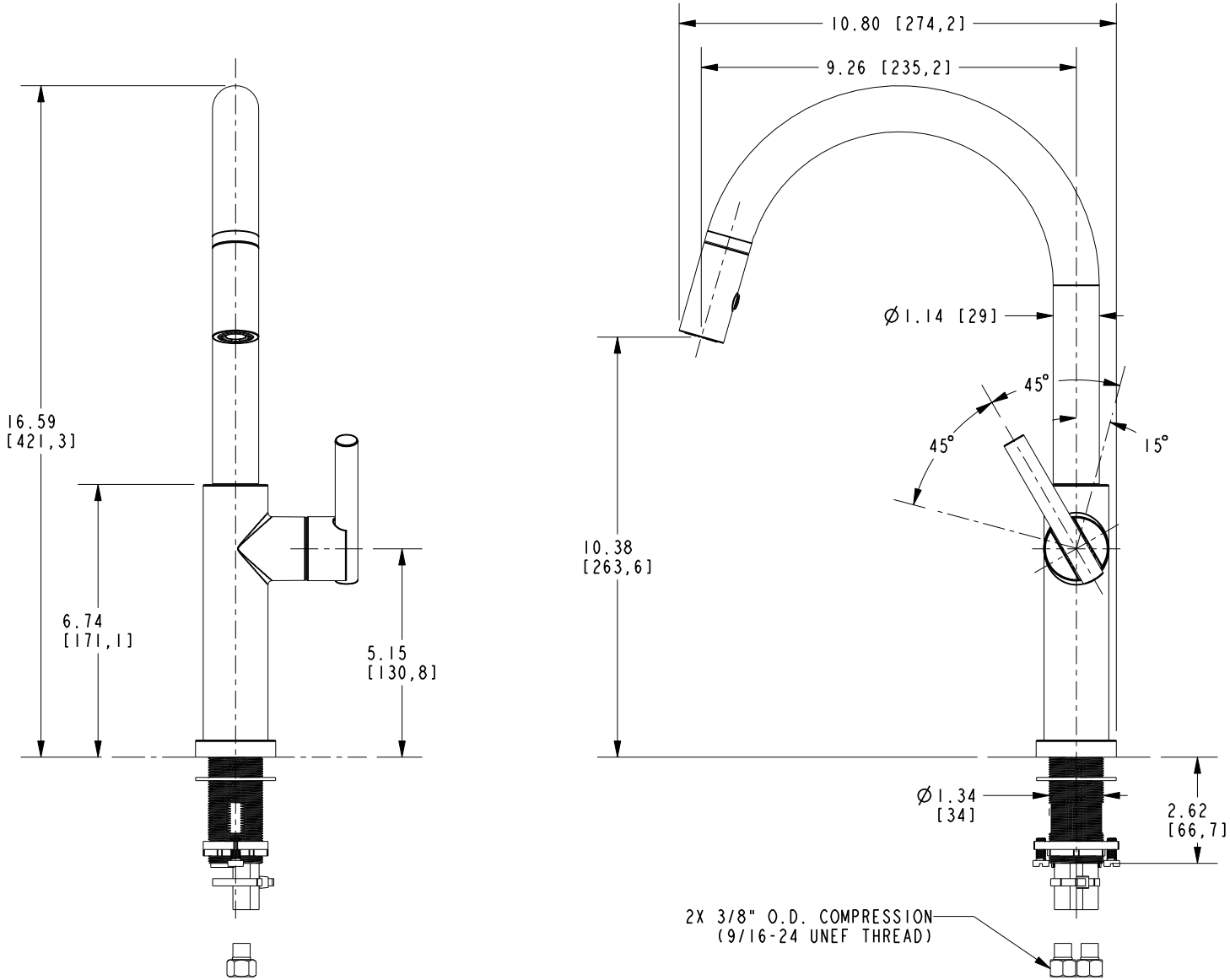

BRASSTECH INCORPORATED

2001 E. CARNEGIE AVE.
SANTA ANA, CA 92705
(949) 417-5207

DWG NO.	REV
1500-5143	B

SCALE	REF.	SHEET
.250	-	2 OF 2