AXOR

AXOR Montreux
Widespread Faucet 30 with Lever Handles and Pop-Up Drain, 1.2 GPM
Finishes : Part no. : **16535251**

Features

- Spray modes: Laminar spray
- Flow: 1.2 GPM (4.5 L/Min)
- 90° ceramic valves
- Includes pop-up drain

Item details

List Price

Technology

EcoRight

Comfort Zone

Compliance

UPC C ®

WaterSense Meets EPA Criteria Certified by IAPMO R&T

Product image
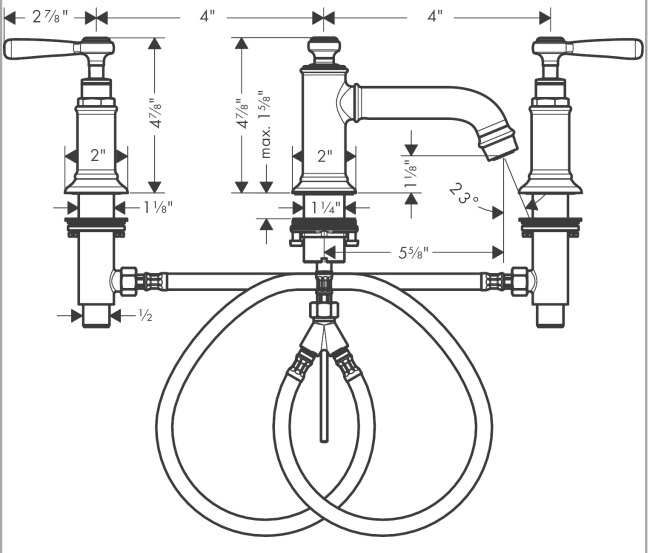
Scale drawing