NOTES:

(N1) 1. FIT / FORM / FUNCTION SHALL FOLLOW PS-E.008.

△2. APPLY ADHESIVE LOCTITE 680 OR EQUIVALENT.

BILL OF MATERIAL (CURRENT LEVEL)

ITEM	PT/ASSY	DESCRIPTION	TYPE	QTY.
1	80200	SHOWER ARM	PART	1
2	13037	ADAPTER, SHOWER ARM	PART	1
3	8-072	ESCUTCHEON ASM	ASSEMBLY	1
4	91021	O-RING, #2- 017, EPDM, 65-75 DURO, NSF	PART	1

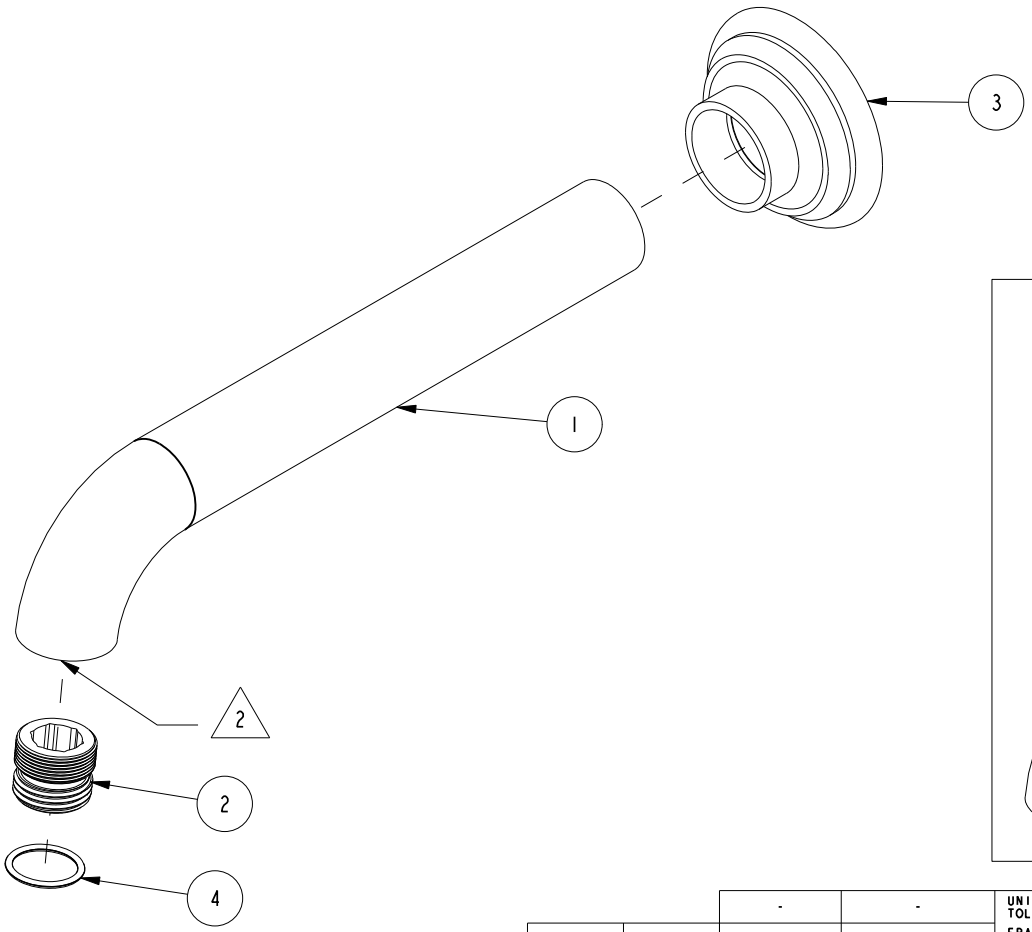

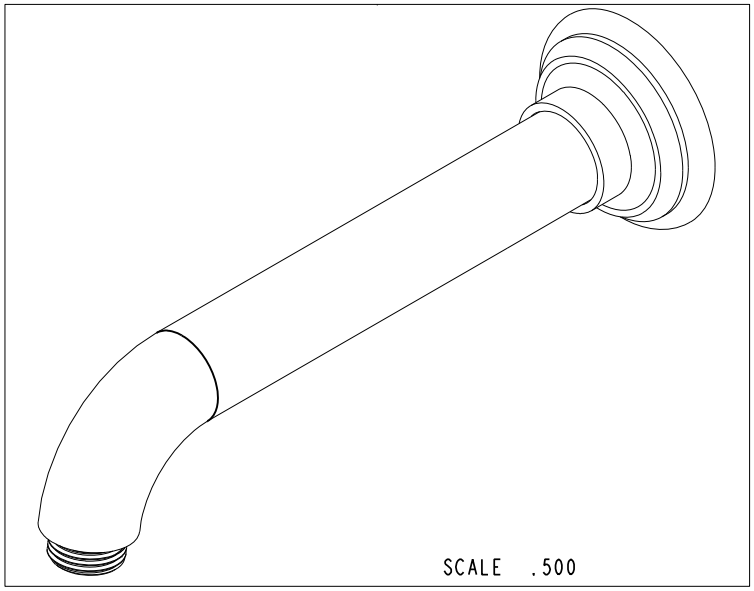

Cesar Gayosso

ZONE	REV	DESCRIPTION	DATE	APPROVED
-	B	EN-3552c	08/14/18	C.G.

COPYRIGHT 2005 BRASSTECH, INC. THESE DRAWINGS AND THE DESIGNS DEPICTED HEREIN ARE THE PROPRIETARY PROPERTY OF BRASSTECH. ANY USE OR REPRODUCTION IS SUBJECT TO THE EXPRESS APPROVAL OF BRASSTECH. UNAUTHORIZED USE IS STRICTLY PROHIBITED. ALL RIGHTS RESERVED.

		-	-
TESTING	-	-	-
ASSEMBLY	-	-	-
PLATING	-		
POLISHING	-	NEXT ASSY	USED ON
MACHINING	-	APPLICATION	
TOOLING FIXTURE #		REMOVE ALL BURRS AND SHARP EDGES	

UNITS ARE: INCHES [MM]
TOLERANCES ARE:
FRACTIONS ±1/16" DECIMALS .X ±.1 [2,5] .XX ±.06 [1,5] ANGLES ±1°
(X.XXX) DENOTES CRITICAL DIMS.
ALL THREADS ARE CRITICAL

DRAWN	C.GAYOSSO	08/14/18
CHECKED	V.VU	08/14/18
APPROVED	V.VU	08/14/18

BRASSTECH INCORPORATED
2001 CARNEGIE AVE.
SANTA ANA, CA 92705
(949) 417-5207

SHOWER ARM

DWG NO. 201-1 REV B

SCALE .500 REF. - SHEET 1 OF 2

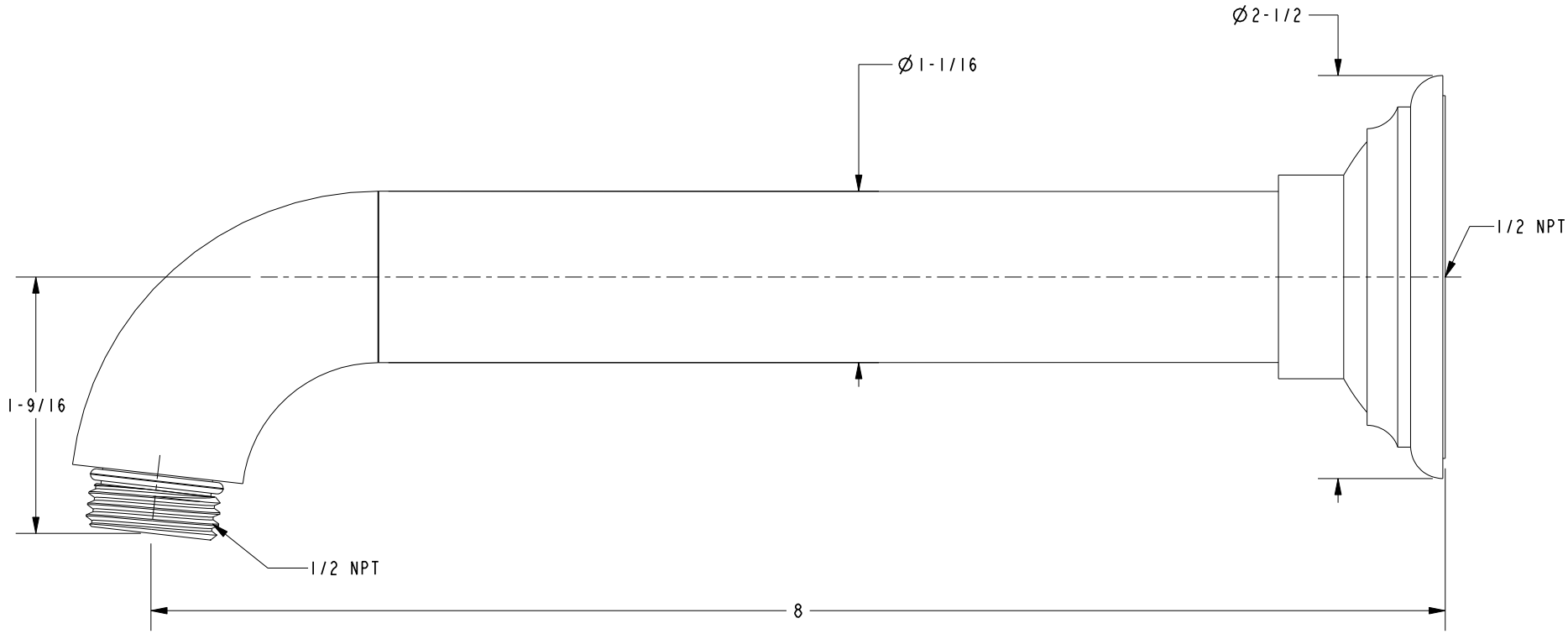

BRASSTECH INCORPORATED

2001 E. CARNEGIE AVE.
SANTA ANA, CA 92705
(949) 417-5207

DWG NO.	REV
201-1	B

SCALE	REF.	SHEET
1.000	-	2 OF 2