NOTES:

N1 1. FIT / FORM / FUNCTION SHALL FOLLOW PS-E.008.

2. BAG 5-007 IN A SEPARATE BAG.

3. INSTALLATION TORQUE 8-14 LB-FT.

4. SLIT O-RING, ITEM 4, BEFORE INSTALLING.

5. APPLY LOCTITE 680.

6 APPLY THIN FILM OF DOW CORNING 111

7 APPLY LOCTITE 242.

N8 8. ASSEMBLY SHALL BE WATER TESTED.

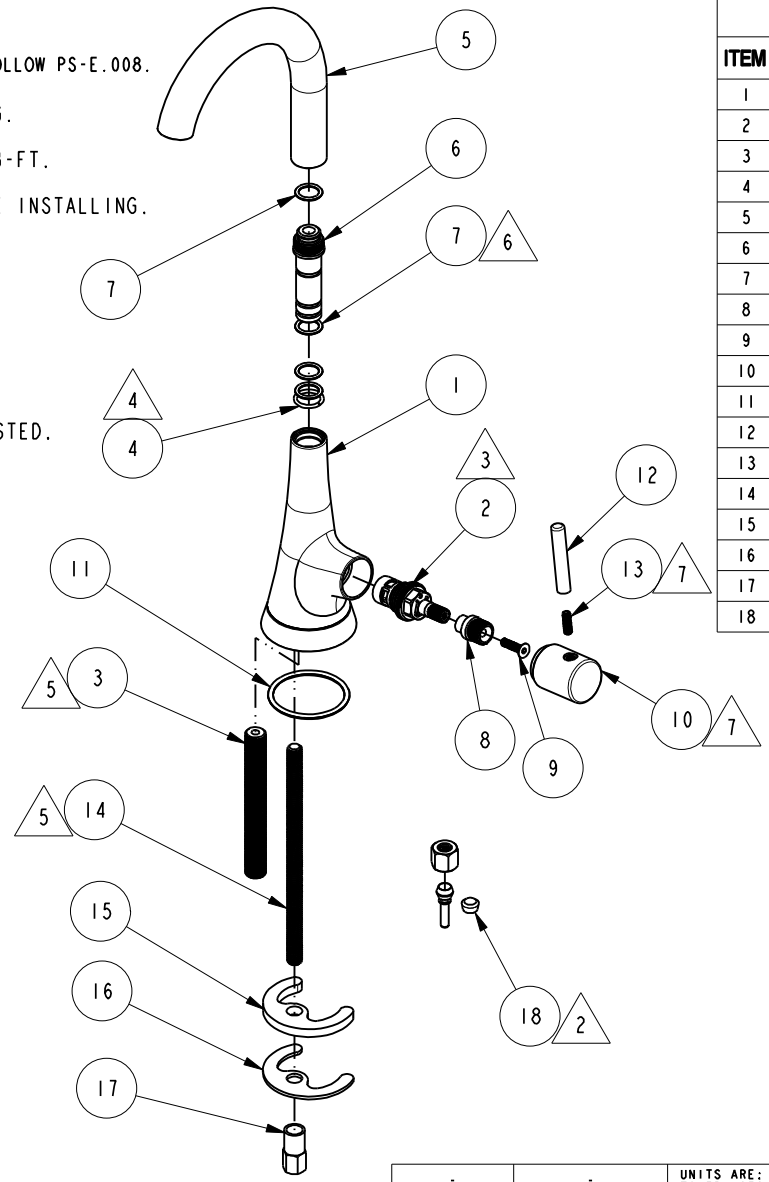

BILL OF MATERIAL (CURRENT LEVEL)

ITEM	PT/ASSY	DESCRIPTION	TYPE	QTY.
1	11827	BODY_COLD	PART	1
2	1-134	CARTR 3/8 HOT 1/4 TR	PART	1
3	50760	NIPPLE WATER DISP	PART	1
4	91383	O-RING, #2- 014, TEFLON, NSF 61	PART	1
5	11822	SPOUT	PART	1
6	11825	ADAPTER - VESSA WATER DISPENSER	PART	1
7	91018	O-RING, #2- 013, EPDM, 65-75 DURO,NSF-61	PART	4
8	11833	ADAPTER	PART	1
9	92477	SCRW, M4 X 16 SKT FLT HD SS	PART	1
10	11823	HANDLE	PART	1
11	91767	O-RING, #2-128, 50 DURO	PART	1
12	11824	LEVER, HANDLE	PART	1
13	92486	SCRW, 8-32 X 1/2 SKT HD CUP PT SS	PART	1
14	10661	MOUNTING STUD	PART	1
15	10514	MOUNTING CRESCENT	PART	1
16	91063	MOUNTING CRESCENT GASKET	PART	1
17	10516	MOUNTING NUT	PART	1
18	5-007	1/4 COMP KIT	ASSEMBLY	1

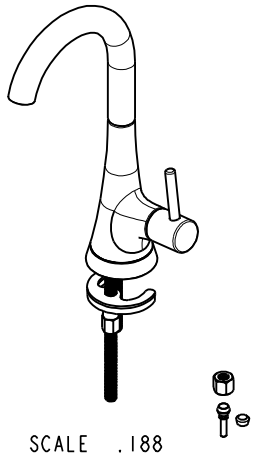

SCALE .188

ZONE	REV	DESCRIPTION	DATE	APPROVED
-	D	EN-3722	02/08/19	C.G.
-	C	EN-2601	09/16/13	-
-	B	EN-2528	05/08/13	-
-	A	EN-1941	01/31/12	-
-	-	EN-1552-4	02/01/11	-

COPYRIGHT 2005 BRASSTECH, INC. THESE DRAWINGS AND THE DESIGNS DEPICTED HEREIN ARE THE PROPRIETARY PROPERTY OF BRASSTECH. ANY USE OR REPRODUCTION IS SUBJECT TO THE EXPRESS APPROVAL OF BRASSTECH. UNAUTHORIZED USE IS STRICTLY PROHIBITED. ALL RIGHTS RESERVED.

TESTING	-	-	-
ASSEMBLY	-	-	-
PLATING	-	-	-
POLISHING	-	NEXT ASSY	USED ON
MACHINING	-	APPLICATION	
TOOLING FIXTURE #		REMOVE ALL BURRS AND SHARP EDGES	

UNITS ARE: INCHES [MM]
TOLERANCES ARE:
FRACTIONS ±1/16" DECIMALS .X ±.1 [2,5] .XX ±.06 [1,5] ANGLES ±1°
(X.XXX) DENOTES CRITICAL DIMS.
ALL THREADS ARE CRITICAL

DRAWN	JINSON	02/08/19
CHECKED	C.G.	02/08/19
APPROVED	C.G.	02/08/19

BRASSTECH INCORPORATED
2001 CARNEGIE AVE.
SANTA ANA, CA 92705
(949) 417-5207

VESPERA COLD WATER DISPENSER

DWG NO. 2500-5623 REV D

SCALE .250 REF. - SHEET 1 OF 2

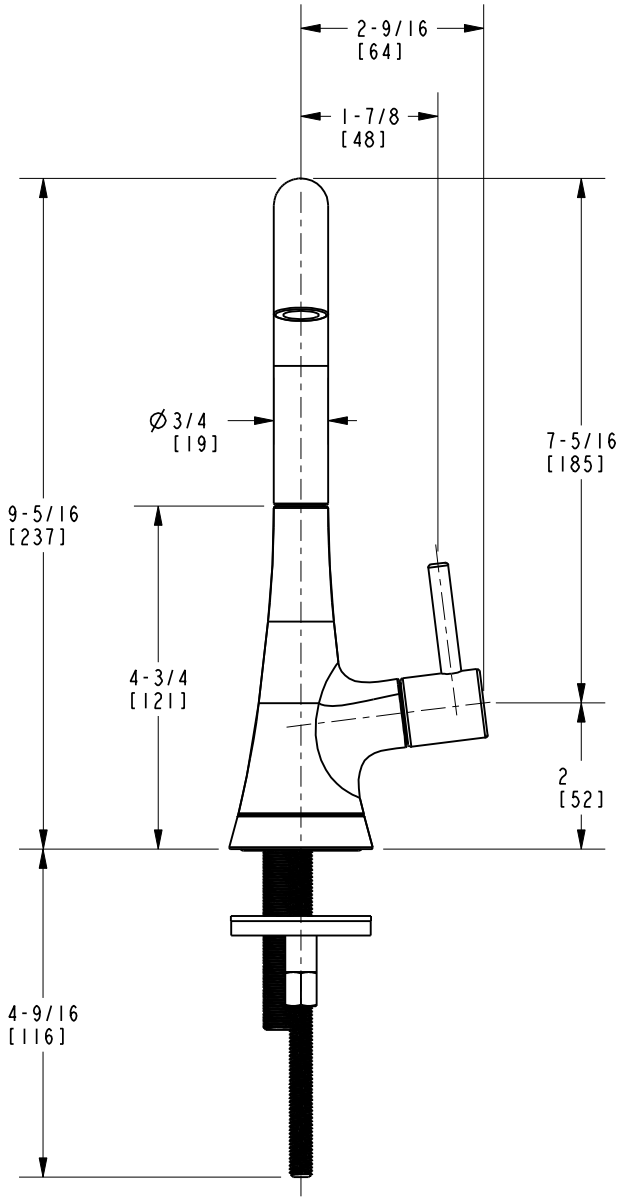

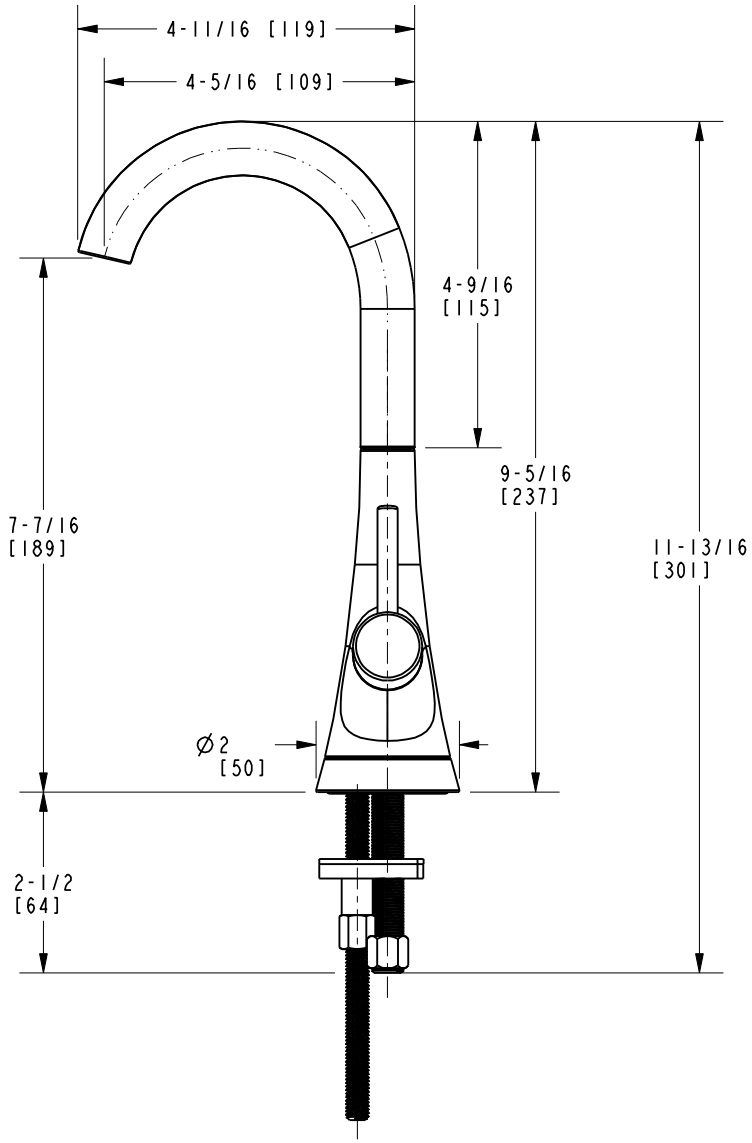

BRASSTECH INCORPORATED
2001 E. CARNEGIE AVE.
SANTA ANA, CA 92705
(949) 417-5207

DWG NO.	REV
2500-5623	D

SCALE	REF.	SHEET
.375	-	2 OF 2