NOTES:

N1 1. FIT / FORM / FUNCTION SHALL FOLLOW PS-E.008.

2 APPLY LOCTITE 680.

3 CUT AND SHORTEN O-RING BY .13" TO .20" IN LENGTH BEFORE INSTALLING.

4 SLIT O-RING BEFORE INSTALLING.

5 APPLY LOCTITE 242.

N6 6 CONNECT WHITE AND RED TUBINGS TOGETHER AND WATER TEST WHOLE UNIT.

7 BAG 5-035 IN A SEPARATE BAG.

N8 8 REWORK CARTRIDGE ASSY IF THE HANDLE DOES NOT RETURN TO THE 'OFF' POSITION AUTOMATICALLY AFTER WATER TESTING.

9 INSTALLATION TORQUE: 8-14 LB-FT.

10 INSTALLATION TORQUE: 78 LB-IN +/- 6 LB-IN.

11 LUBRICATE SPRING WITH DOW CORNING 111.

12 INSTALLATION TORQUE: 10-14 LB-IN.

13 APPLY THIN FILM OF DOW CORNING 111.

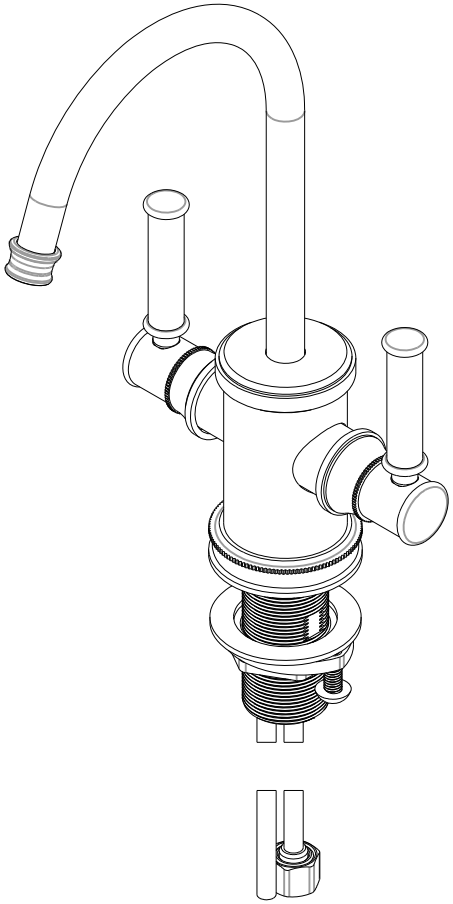

## BILL OF MATERIAL (CURRENT LEVEL)

| ITEM | PT/ASSY | DESCRIPTION | TYPE | QTY. |
|---|---|---|---|---|
| 1 | 1-134 | CARTR 3/8 HOT 1/4 TR | PART | 1 |
| 2 | 1-393 | 1-1/8 18 UNEF MOUNTING KIT | ASSEMBLY | 1 |
| 3 | 1-431 | RED SUPPLY LINE | ASSEMBLY | 1 |
| 4 | 1-432 | BLUE SUPPLY LINE | ASSEMBLY | 1 |
| 5 | 1-433 | GREY SUPPLY LINE | ASSEMBLY | 1 |
| 6 | 5-035 | COUPLING & INSERT ASM | ASSEMBLY | 1 |
| 7 | 5-061 | ADAPTER/CARTRIDGE ASSY | ASSEMBLY | 1 |
| 8 | 11733 | SHELL, SPOUT, WATER DISP | PART | 1 |
| 9 | 11834 | ADAPTER | PART | 1 |
| 10 | 12511 | ESCUTCHEON | PART | 1 |
| 11 | 12512 | BONNET | PART | 2 |
| 12 | 12513 | BODY CAP | PART | 1 |
| 13 | 12514 | LEVER HANDLE | PART | 2 |
| 14 | 12515 | HANDLE HUB | PART | 2 |
| 15 | 13070 | RETAINER PLATE | PART | 1 |
| 16 | 13285 | BODY | PART | 1 |
| 17 | 13289 | NIPPLE | PART | 1 |
| 18 | 50713 | SPOUT, WATER DISP. (TRAD.) | PART | 1 |
| 19 | 50714 | WATER DISP. CAR.T HOLDER | PART | 2 |
| 20 | 91017 | O-RING, #2- 012, EPDM, 65-75 DURO, NSF 61 | PART | 2 |
| 21 | 91023 | O-RING, #2- 019, EPDM, 65-75 DURO, NSF 61 | PART | 1 |
| 22 | 91382 | O-RING, #2- 012, TEFLON, | PART | 1 |
| 23 | 91383 | O-RING, #2- 014, TEFLON, NSF 61 | PART | 1 |
| 24 | 91424 | WSHR, .81 ID X .93 OD X .045 THK, FLT, PLST | PART | 2 |
| 25 | 91553 | RED IDENTIFIER | PART | 1 |
| 26 | 91648 | BLUE IDENTIFIER | PART | 1 |
| 27 | 91768 | O-RING, #2-130, EP, 50 DURO - GREY | PART | 1 |
| 28 | 92016 | SCRW, 10-24 X 3/4 SKT HD FLT PT SS | PART | 1 |
| 29 | 92192 | SCRW, 10-32 X 5/8 SKT HD CUP PT SS | PART | 2 |
| 30 | 92477 | SCRW, M4 X 16 SKT FLT HD SS | PART | 1 |
| 31 | 98043 | TAG LABEL, HOT WATER WARNING | PART | 1 |

Cesar Gayosso

Digitally signed by Cesar Gayosso
Date: 2019.11.27 10:42:38 -08'00'

| ZONE | REV | DESCRIPTION | DATE | APPROVED |
|---|---|---|---|---|
| - | F | EN-3634A | 11/21/19 | C.G. |
| - | E | EN-3941 | 08/28/19 | C.G. |
| - | D | EN-3862 | 05/07/19 | C.G. |
| - | C | EN-3722 | 02/08/19 | C.G. |
| - | B | EN-3558a | 01/02/19 | V.V. |
| - | A | EN-3293 | 3/20/16 | J.A |
| - | - | EN-2980 | 09/14/16 | J.A |

COPYRIGHT 2005 BRASSTECH, INC. THESE DRAWINGS AND THE DESIGNS DEPICTED HEREIN ARE THE PROPRIETARY PROPERTY OF BRASSTECH. ANY USE OR REPRODUCTION IS SUBJECT TO THE EXPRESS APPROVAL OF BRASSTECH. UNAUTHORIZED USE IS STRICTLY PROHIBITED. ALL RIGHTS RESERVED.

| | | | |
|---|---|---|---|
| TESTING | - | - | - |
| ASSEMBLY | - | - | - |
| PLATING | - | - | - |
| POLISHING | - | NEXT ASSY | USED ON |
| MACHINING | - | APPLICATION | |
| TOOLING FIXTURE # | | REMOVE ALL BURRS AND SHARP EDGES | |

UNITS ARE: INCHES [MM]
TOLERANCES ARE:
FRACTIONS ±1/16" DECIMALS .X ±.1 [2,5] .XX ±.06 [1,5] ANGLES ±1°
(X.XXX) DENOTES CRITICAL DIMS.
ALL THREADS ARE CRITICAL

| | | |
|---|---|---|
| DRAWN | JINSON | 11/21/19 |
| CHECKED | C.G. | 11/21/19 |
| APPROVED | C.G. | 11/21/19 |

BRASSTECH INCORPORATED
2001 CARNEGIE AVE.
SANTA ANA, CA 92705
(949) 417-5207

# H & C WATER DISP, CONTEMP

DWG NO. 2940-5603 REV F

SCALE .400 REF. - SHEET 1 OF 3

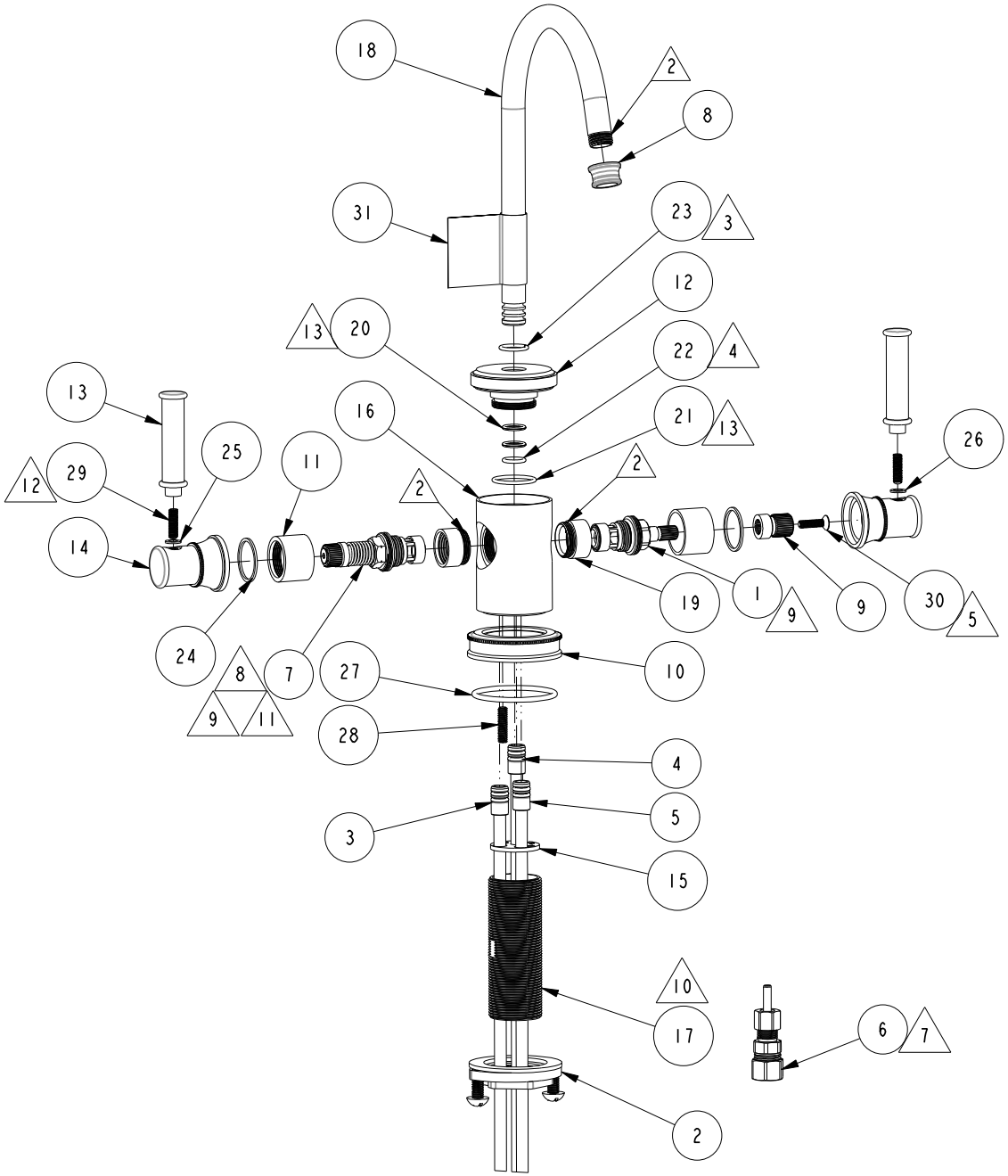


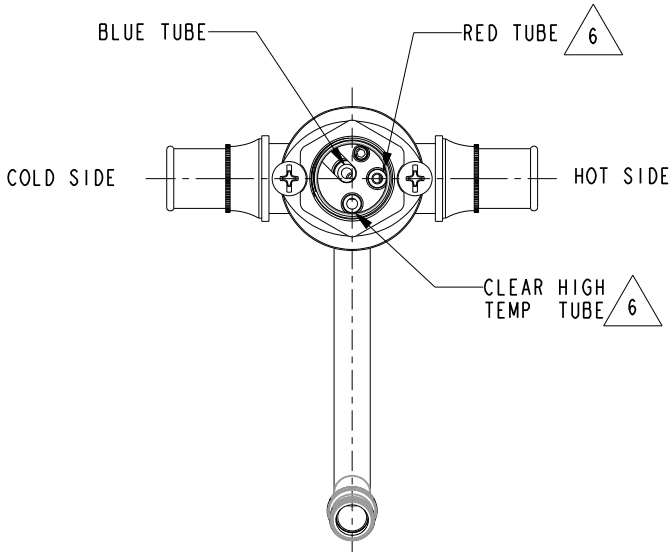


BOTTOM VIEW
SCALE .375

**BRASSTECH** INCORPORATED
2001 E. CARNEGIE AVE.
SANTA ANA, CA 92705
(949) 417-5207

| DWG NO. | REV |
|---|---|
| 2940-5603 | F |

| SCALE .275 | REF. - | SHEET 2 OF 3 |
|---|---|---|

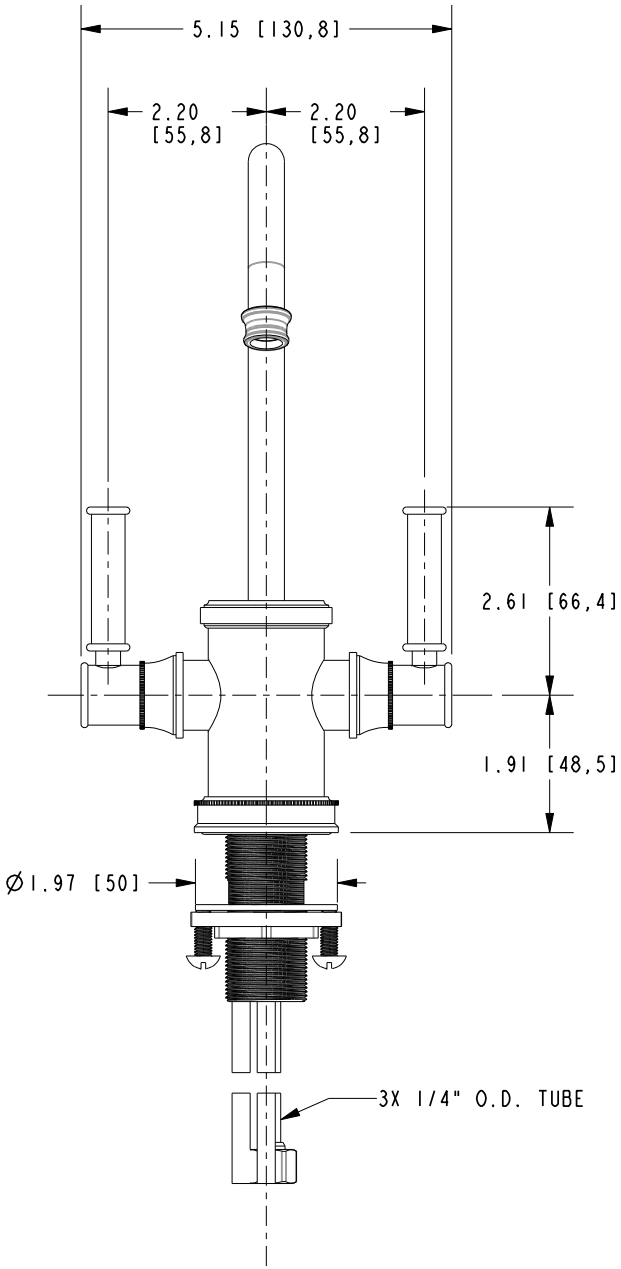


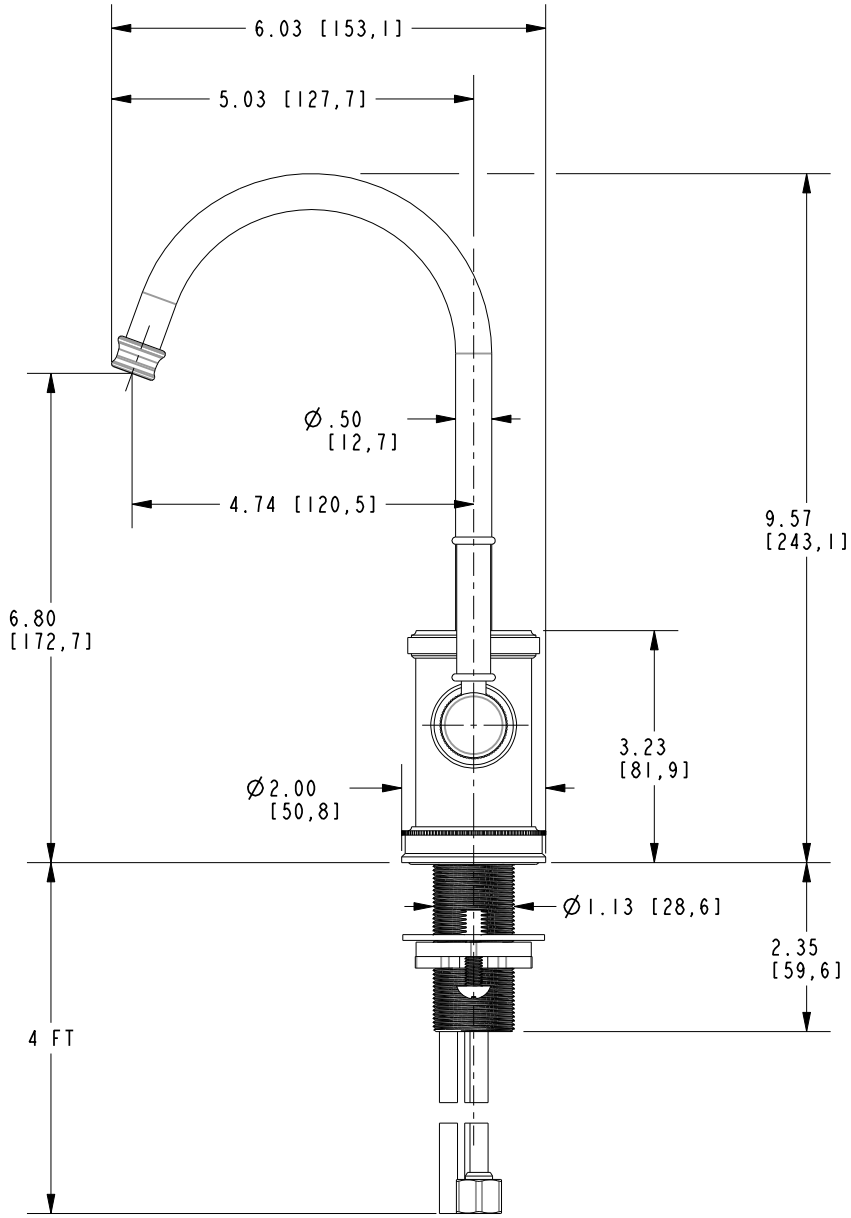


**BRASSTECH** INCORPORATED
2001 E. CARNEGIE AVE.
SANTA ANA, CA 92705
(949) 417-5207

| DWG NO. | REV |
|---|---|
| 2940-5603 | F |

| SCALE .375 | REF. - | SHEET 3 OF 3 |
|---|---|---|