NOTES:

N1 1. FIT / FORM / FUNCTION SHALL FOLLOW PS-E.008.

2 PUT THESE ITEMS IN SEPARATE PLASTIC BAGS.

3 TORQUE TO 7.5-8.5 LB-FT.

4 APPLY THIN COAT OF SILICON GREASE FOR ALL O-RINGS BEFORE INSTALLATION.

5 APPLY LOCTITE 242, IF SCREW DOES NOT HAVE NYLON PATCH.

6 APPLY LOCTITE 680.

7. APPLY SILICONE GREASE 10" FROM OUTLET OF PN 11877.

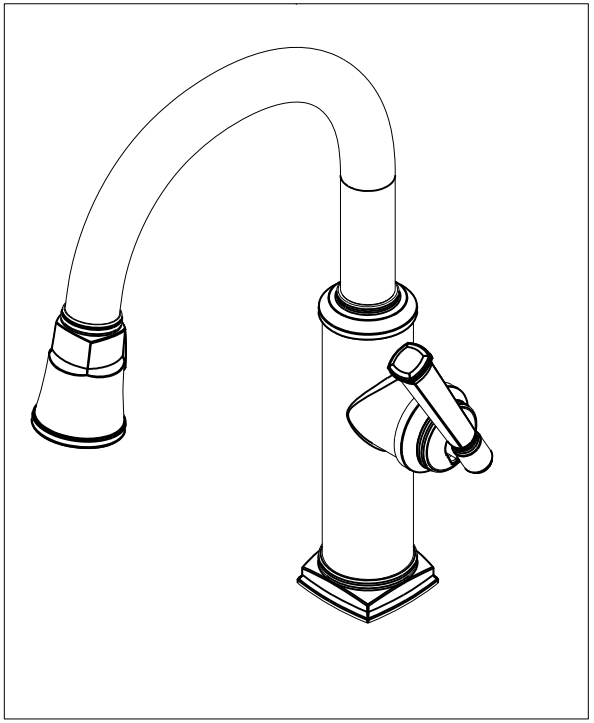

J.R. 01/21/2020

BILL OF MATERIAL (CURRENT LEVEL)

ITEM	PT/ASSY	DESCRIPTION	TYPE	QTY.
1	20-240	BASE RING ASM	ASSEMBLY	1
2	20-241	MAIN BODY ASM, TAFT	ASSEMBLY	1
3	12612	COLLAR	PART	1
4	12637	SPOUT ADAPTER	PART	1
5	1-064	SINGLE LEVER CARTRIDGE	PART	1
6	11874	HANDLE ADAPTER SCREW	PART	1
7	1-266	CART. RETAINER ASM	ASSEMBLY	1
8	91534	CARTRIDGE STEM INSERT	PART	1
9	12842	HANDLE HUB	PART	1
10	20-319	HANDLE LEVER ASM	ASSEMBLY	1
11	91030	O-RING, #2- 115, EPDM, 65-75 DURO, NSF 61	PART	4
12	91712	SLEEVE	PART	1
13	12493	SPOUT	PART	1
14	91544	MAGNET DOCKING	ASSEMBLY	1
15	3-596	SPRAY HEAD, TAFT	ASSEMBLY	1
16	11877	HOSE, PULLDOWN, GREY	ASSEMBLY	1
17	91255	O-RING, #2- 011, EPDM, 65-75 DURO,NSF-61	PART	2
18	91568	RETAINER CLIP	PART	1
19	1-256	MOUNTING KIT	ASSEMBLY	1
20	91341	ZIP TIE	PART	1
21	98044	LABEL - HOT	PART	1
22	1-286	WEIGHT	ASSEMBLY	1

Juan Romo Digitally signed by Juan Romo Date: 2019.10.10 15:41:38 -07'00'

ZONE	REV	DESCRIPTION	DATE	APPROVED
-	C	EN-3931b	09/17/19	J.M.
-	B	EN-3768	12/28/18	V.V.
-	A	EN-3413b	11/14/17	JM
-	-	EN-3229	09/25/17	JM

COPYRIGHT 2005 BRASSTECH, INC. THESE DRAWINGS AND THE DESIGNS DEPICTED HEREIN ARE THE PROPRIETARY PROPERTY OF BRASSTECH. ANY USE OR REPRODUCTION IS SUBJECT TO THE EXPRESS APPROVAL OF BRASSTECH. UNAUTHORIZED USE IS STRICTLY PROHIBITED. ALL RIGHTS RESERVED.

TESTING	-	-	-
ASSEMBLY	-	-	-
PLATING	-	-	-
POLISHING	-	NEXT ASSY	USED ON
MACHINING	-	APPLICATION	
TOOLING FIXTURE #		REMOVE ALL BURRS AND SHARP EDGES	

UNITS ARE: INCHES [MM]
TOLERANCES ARE:
FRACTIONS ±1/16" DECIMALS .X ±.1 [2,5] .XX ±.06 [1,5] ANGLES ±1°
X.XXX DENOTES CRITICAL DIMS.
ALL THREADS ARE CRITICAL

DRAWN	JINSON	09/17/19
CHECKED	J.M.	09/17/19
APPROVED	J.M.	09/17/19

BRASSTECH INCORPORATED
2001 CARNEGIE AVE.
SANTA ANA, CA 92705
(949) 417-5207

PREP/BAR PULL DOWN

DWG NO. 3160-5203 REV C

SCALE .250 REF. - SHEET 1 OF 3

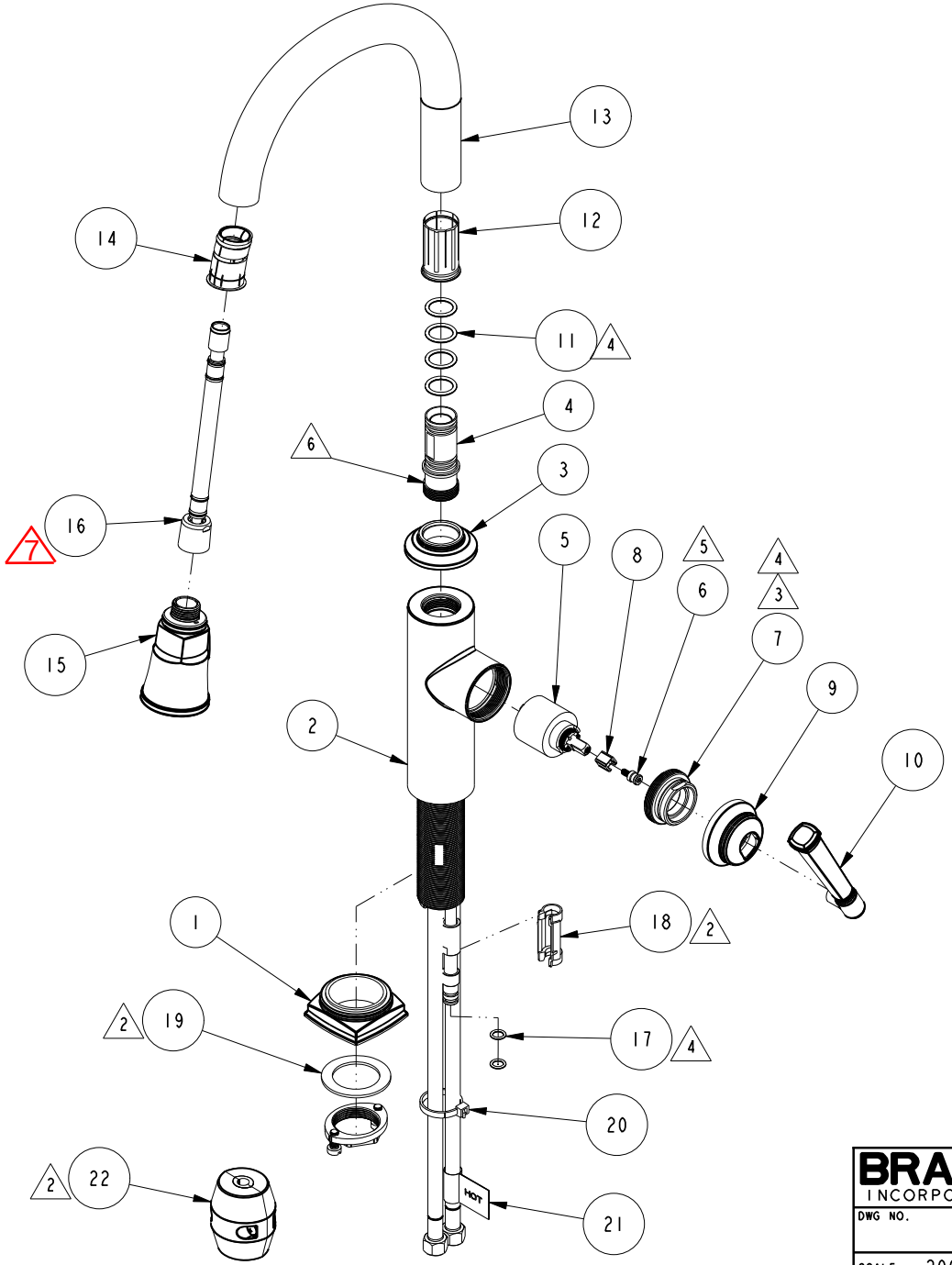

BRASSTECH INCORPORATED

2001 E. CARNEGIE AVE.
SANTA ANA, CA 92705
(949) 417-5207

DWG NO.	REV
3160-5203	C

SCALE	REF.	SHEET
.200	-	2 OF 3

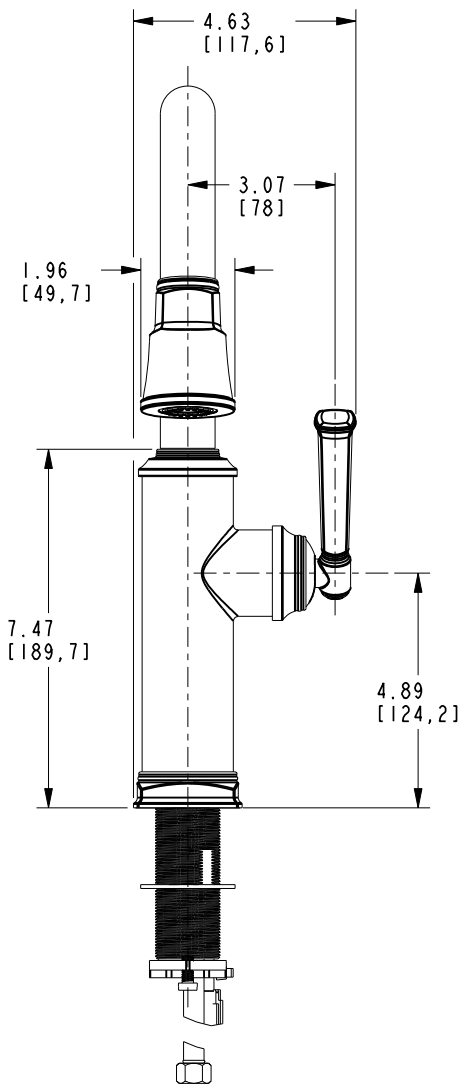

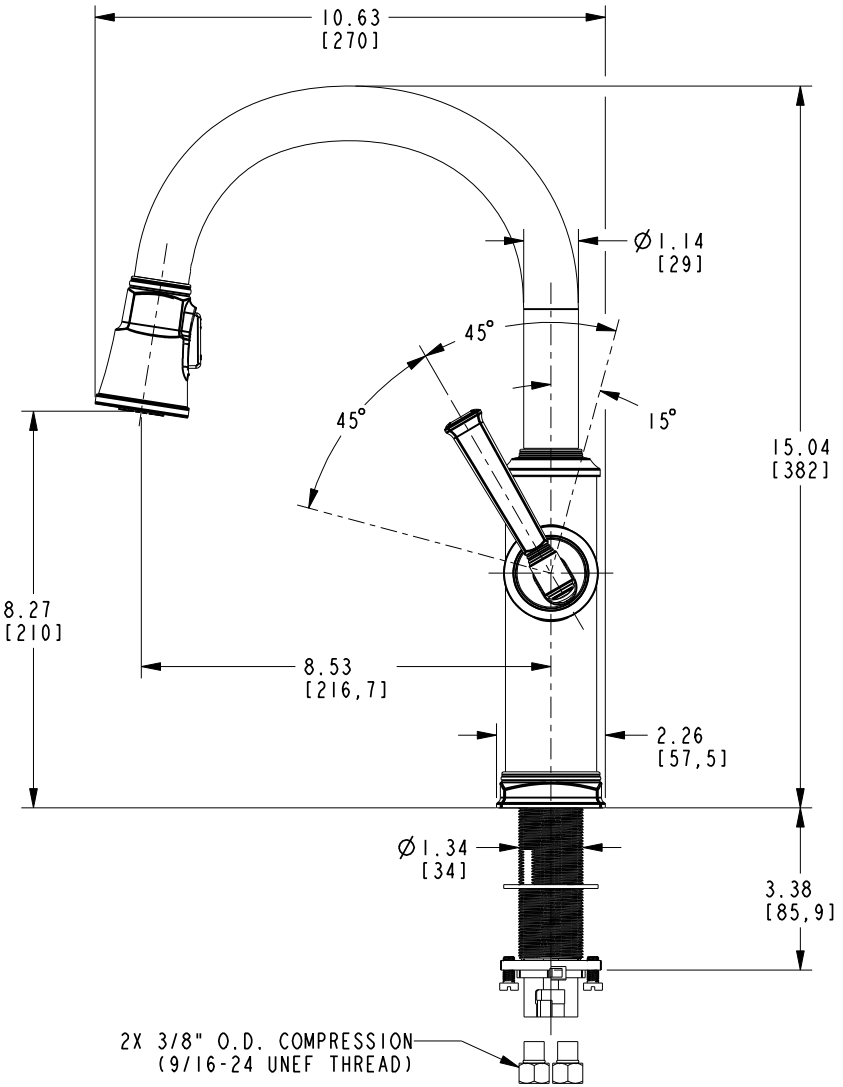

BRASSTECH INCORPORATED

2001 E. CARNEGIE AVE.
SANTA ANA, CA 92705
(949) 417-5207

DWG NO.	REV
3160-5203	C

SCALE	REF.	SHEET
.250	-	3 OF 3