NOTES:

N1 1. FIT / FORM / FUNCTION SHALL FOLLOW PS-E.008.

2 APPLY LOCTITE 680.

3 CUT AND SHORTEN O-RING BY .13" TO .20" IN LENGTH BEFORE INSTALLING.

4 SLIT O-RING BEFORE INSTALLING.

5 APPLY LOCTITE 242.

N6 6 CONNECT WHITE AND RED TUBINGS TOGETHER AND WATER TEST WHOLE UNIT.

7 BAG 5-035 IN A SEPARATE BAG.

N8 8 REWORK CARTRIDGE ASSY IF THE HANDLE DOES NOT RETURN TO THE 'OFF' POSITION AUTOMATICALLY AFTER WATER TESTING.

9 INSTALLATION TORQUE: 8-14 LB-FT.

10 INSTALLATION TORQUE: 78 LB-IN +/- 6 LB-IN.

11 LUBRICATE SPRING WITH DOW CORNING 111 SILICONE COMPOUND.

12 APPLY LIGHT FILM OF DOW CORNING 111 SILICONE COMPOUND.

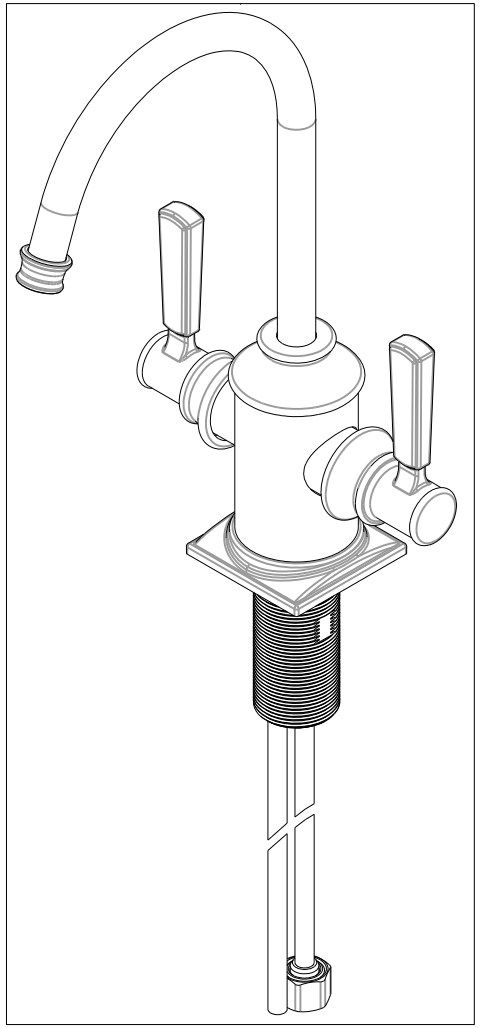

BILL OF MATERIAL (CURRENT LEVEL)

ITEM	PT/ASSY	DESCRIPTION	TYPE	QTY.
1	1-134	CARTR 3/8 HOT 1/4 TR	PART	1
2	1-393	1-1/8 18 UNEF MOUNTING KIT	ASSEMBLY	1
3	1-431	RED SUPPLY LINE	ASSEMBLY	1
4	1-432	BLUE SUPPLY LINE	ASSEMBLY	1
5	1-433	GREY SUPPLY LINE	ASSEMBLY	1
6	5-035	COUPLING & INSERT ASM	ASSEMBLY	1
7	5-061	ADAPTER/CARTRIDGE ASSY	ASSEMBLY	1
8	20-248	BASE RING ASM	ASSEMBLY	1
9	20-288	HANDLE HUB ASM	ASSEMBLY	2
10	11733	SHELL, SPOUT, WATER DISP	PART	1
11	12512	BONNET	PART	2
12	12703	COLLAR	PART	1
13	12750	ADAPTER	PART	1
14	13070	RETAINER PLATE	PART	1
15	13287	WATER DISP. BODY H/C (CONT)	PART	1
16	13289	NIPPLE	PART	1
17	50713	SPOUT, WATER DISP. (TRAD.)	PART	1
18	50714	WATER DISP. CAR.T HOLDER	PART	2
19	50717	WATER DISP SPOUT RETAINER	PART	1
20	91017	O-RING, #2- 012, EPDM, 65-75 DURO, NSF 61	PART	2
21	91023	O-RING, #2- 019, EPDM, 65-75 DURO, NSF 61	PART	1
23	91382	O-RING, #2- 012, TEFLON,	PART	1
24	91383	O-RING, #2- 014, TEFLON, NSF 61	PART	1
25	91424	WSHR, .81 ID X .93 OD X .045 THK, FLT, PLST	PART	2
26	92016	SCRW, 10-24 X 3/4 SKT HD FLT PT SS	PART	1
27	92862	SCRW, M4 X 18 SKT FLT HD SS	PART	1
28	98043	TAG LABEL, HOT WATER WARNING	PART	1

Cesar Gayosso Digitally signed by Cesar Gayosso
Date: 2019.11.27 10:43:58 -08'00'

ZONE	REV	DESCRIPTION	DATE	APPROVED
-	E	EN-3634A	11/20/19	C.G.
-	D	EN-3941	08/28/19	C.G.
-	C	EN-3862	05/08/19	C.G.
-	B	EN-3558a	01/02/19	V.V.
-	A	EN-3693	08/29/18	J.M.
-	-	EN-3076	06/08/17	J.M.

COPYRIGHT 2005 BRASSTECH, INC. THESE DRAWINGS AND THE DESIGNS DEPICTED HEREIN ARE THE PROPRIETARY PROPERTY OF BRASSTECH. ANY USE OR REPRODUCTION IS SUBJECT TO THE EXPRESS APPROVAL OF BRASSTECH. UNAUTHORIZED USE IS STRICTLY PROHIBITED. ALL RIGHTS RESERVED.

TESTING	-	-	-
ASSEMBLY	-	-	-
PLATING	-	-	-
POLISHING	-	NEXT ASSY	USED ON
MACHINING	-	APPLICATION	
TOOLING FIXTURE #		REMOVE ALL BURRS AND SHARP EDGES	

UNITS ARE: INCHES [MM]
TOLERANCES ARE:
FRACTIONS ±1/16" DECIMALS .X ±.1 [2,5] .XX ±.06 [1,5] ANGLES ±1°
(X.XXX) DENOTES CRITICAL DIMS.
ALL THREADS ARE CRITICAL

DRAWN	JINSON	11/20/19
CHECKED	C.G.	11/20/19
APPROVED	C.G.	11/20/19

BRASSTECH INCORPORATED
2001 CARNEGIE AVE.
SANTA ANA, CA 92705
(949) 417-5207

WATER DISPENSER - HOT & COLD

DWG NO. 3170-5603 REV E

SCALE .400 REF. - SHEET 1 OF 3

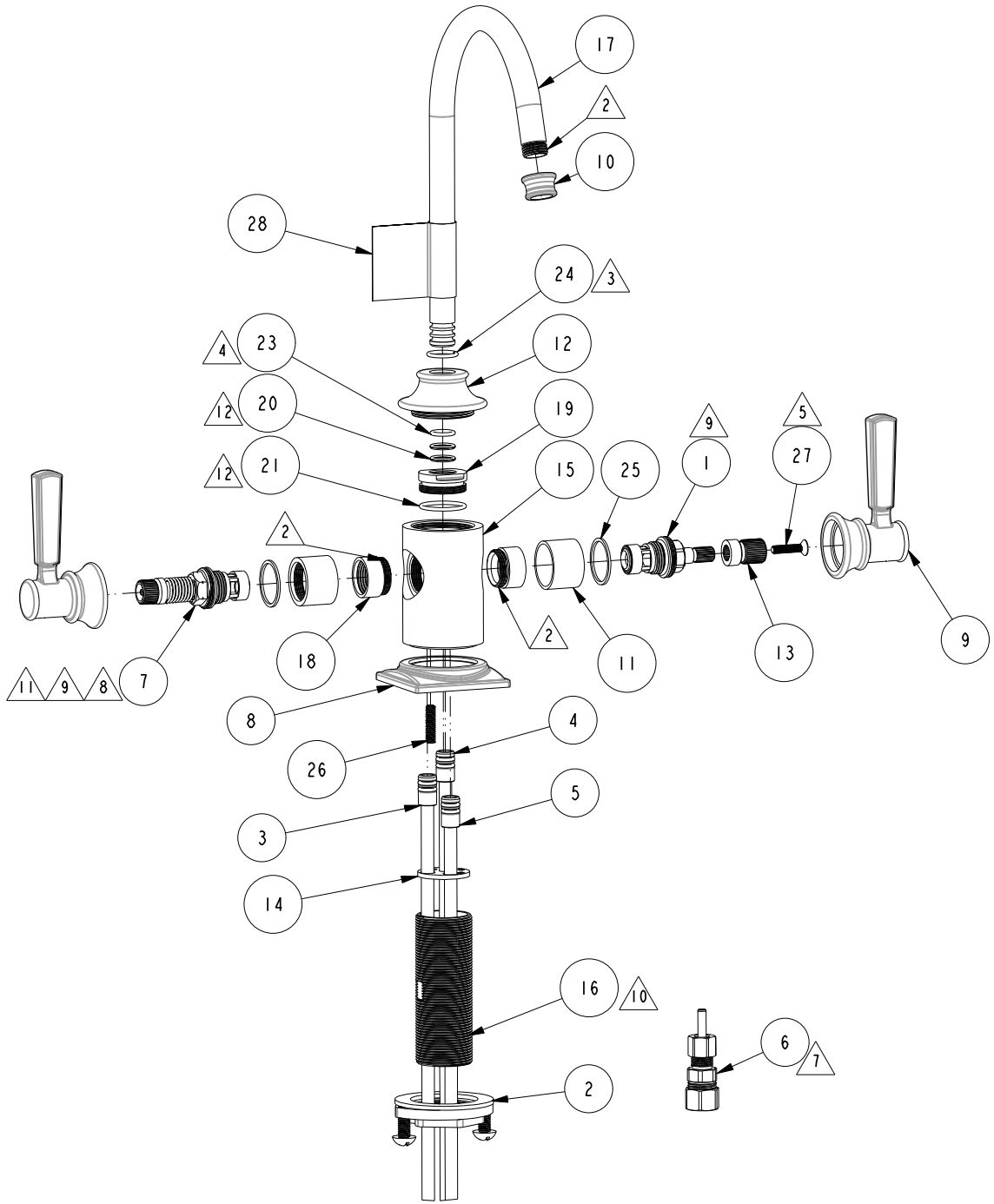

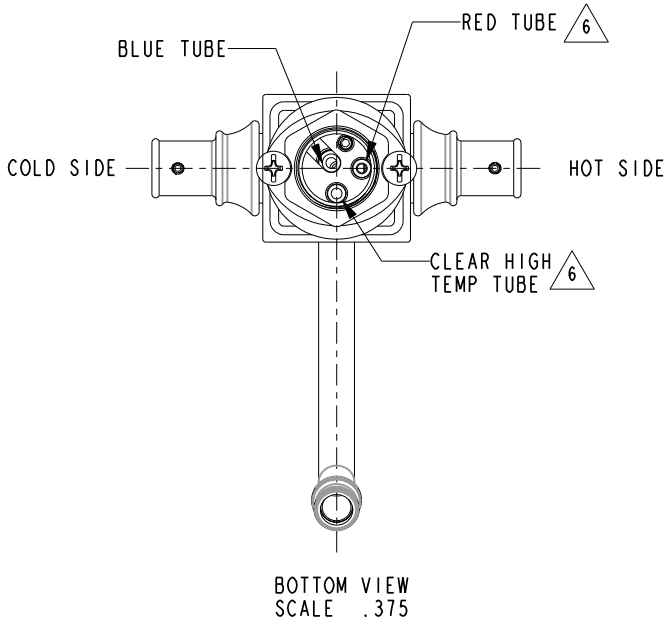

BRASSTECH INCORPORATED

2001 E. CARNEGIE AVE.
SANTA ANA, CA 92705
(949) 417-5207

DWG NO.	REV
3170-5603	E

SCALE	REF.	SHEET
.300	-	2 OF 3

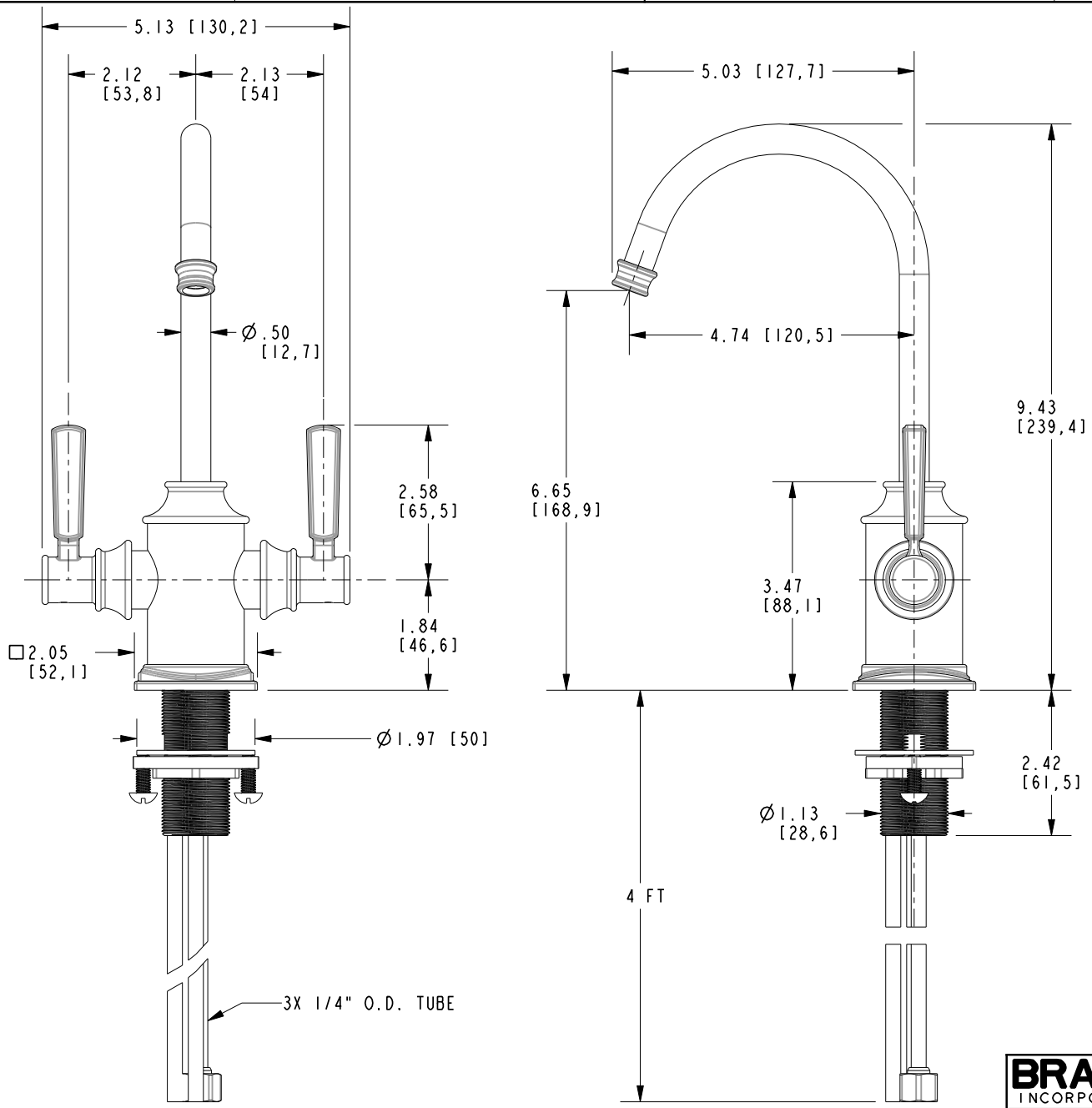

BRASSTECH INCORPORATED

2001 E. CARNEGIE AVE.
SANTA ANA, CA 92705
(949) 417-5207

DWG NO.	REV
3170-5603	E

SCALE	REF.	SHEET
.375	-	3 OF 3