NOTES:

(N1) 1. FIT / FORM / FUNCTION SHALL FOLLOW PS-E.008.

2. PUT THESE ITEMS IN SEPARATE PLASTIC BAGS.

3. TORQUE TO 7.5-8.5 LB-FT.

4. APPLY LIGHT FILM OF DOW CORNING 111 SILICONE COMPOUND TO ALL O-RINGS PRIOR TO INSTALLATION.

5. APPLY LOCTITE 242, IF SCREW DOES NOT HAVE NYLON PATCH.

6. APPLY LOCTITE 680.

7. APPLY SILICONE GREASE 10" FROM OUTLET OF PN 11877.

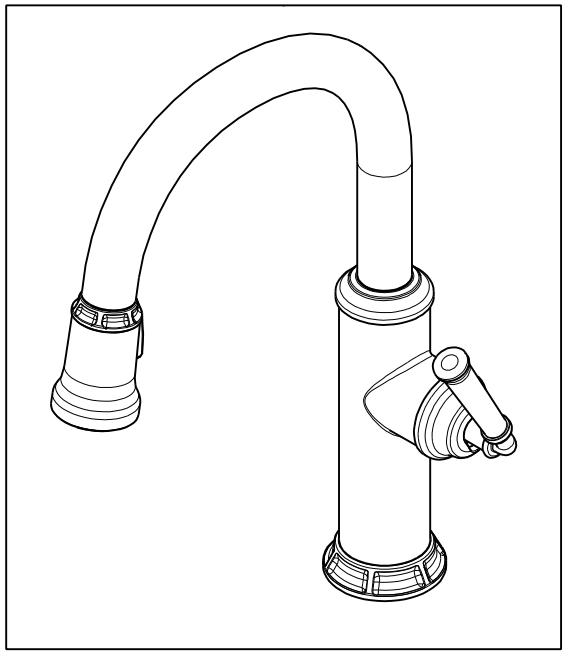

J.R. 01/21/2020

BILL OF MATERIAL (CURRENT LEVEL)

ITEM	PT/ASSY	DESCRIPTION	TYPE	QTY.
1	20-211	BASE RING ASM	ASSEMBLY	1
2	20-278	MAIN BODY ASM, TAFT	ASSEMBLY	1
3	12622	COLLAR	PART	1
4	12637	SPOUT ADAPTER	PART	1
5	91030	O-RING, #2- 115, EPDM, 65-75 DURO, NSF 61	PART	4
6	91712	SLEEVE	PART	1
7	12493	SPOUT	PART	1
8	91544	MAGNET DOCKING	ASSEMBLY	1
9	11877	HOSE, PULLDOWN, GREY	ASSEMBLY	1
10	3-590	SPRAY HEAD, TAFT	ASSEMBLY	1
11	1-064	SINGLE LEVER CARTRIDGE	PART	1
12	1-266	CART. RETAINER ASM	ASSEMBLY	1
13	12841	HANDLE HUB	PART	1
14	91534	CARTRIDGE STEM INSERT	PART	1
15	11874	HANDLE ADAPTER SCREW	PART	1
16	20-318	HANDLE LEVER ASM	ASSEMBLY	1
17	91255	O-RING, #2- 011, EPDM, 65-75 DURO,NSF-61	PART	2
18	91568	RETAINER CLIP	PART	1
19	1-256	MOUNTING KIT	ASSEMBLY	1
20	91341	ZIP TIE	PART	1
21	98044	LABEL - HOT	PART	1
22	1-286	WEIGHT	ASSEMBLY	1

Juan Romo Digitally signed by Juan Romo Date: 2019.10.03 13:06:38 -07'00'

ZONE	REV	DESCRIPTION	DATE	APPROVED
-	B	EN-3931b	09/24/19	J.M.
-	A	EN-3413b	11/14/17	JM
-	-	EN-3076	02/07/17	JM

COPYRIGHT 2005 BRASSTECH, INC. THESE DRAWINGS AND THE DESIGNS DEPICTED HEREIN ARE THE PROPRIETARY PROPERTY OF BRASSTECH. ANY USE OR REPRODUCTION IS SUBJECT TO THE EXPRESS APPROVAL OF BRASSTECH. UNAUTHORIZED USE IS STRICTLY PROHIBITED. ALL RIGHTS RESERVED.

TESTING	-	-	-
ASSEMBLY	-	-	-
PLATING	-	-	-
POLISHING	-	NEXT ASSY	USED ON
MACHINING	-	APPLICATION	
TOOLING FIXTURE #		REMOVE ALL BURRS AND SHARP EDGES	

UNITS ARE: INCHES [MM]
TOLERANCES ARE:
FRACTIONS ±1/16" DECIMALS .X ±.1 [2,5] .XX ±.06 [1,5] ANGLES ±1°
(X.XXX) DENOTES CRITICAL DIMS.
ALL THREADS ARE CRITICAL

DRAWN	JINSON	09/24/19
CHECKED	J.M.	09/24/19
APPROVED	J.M.	09/24/19

BRASSTECH INCORPORATED
2001 CARNEGIE AVE.
SANTA ANA, CA 92705
(949) 417-5207

PREP/BAR PULLDOWN

DWG NO. 3210-5203 REV B

SCALE .250 REF. - SHEET 1 OF 3

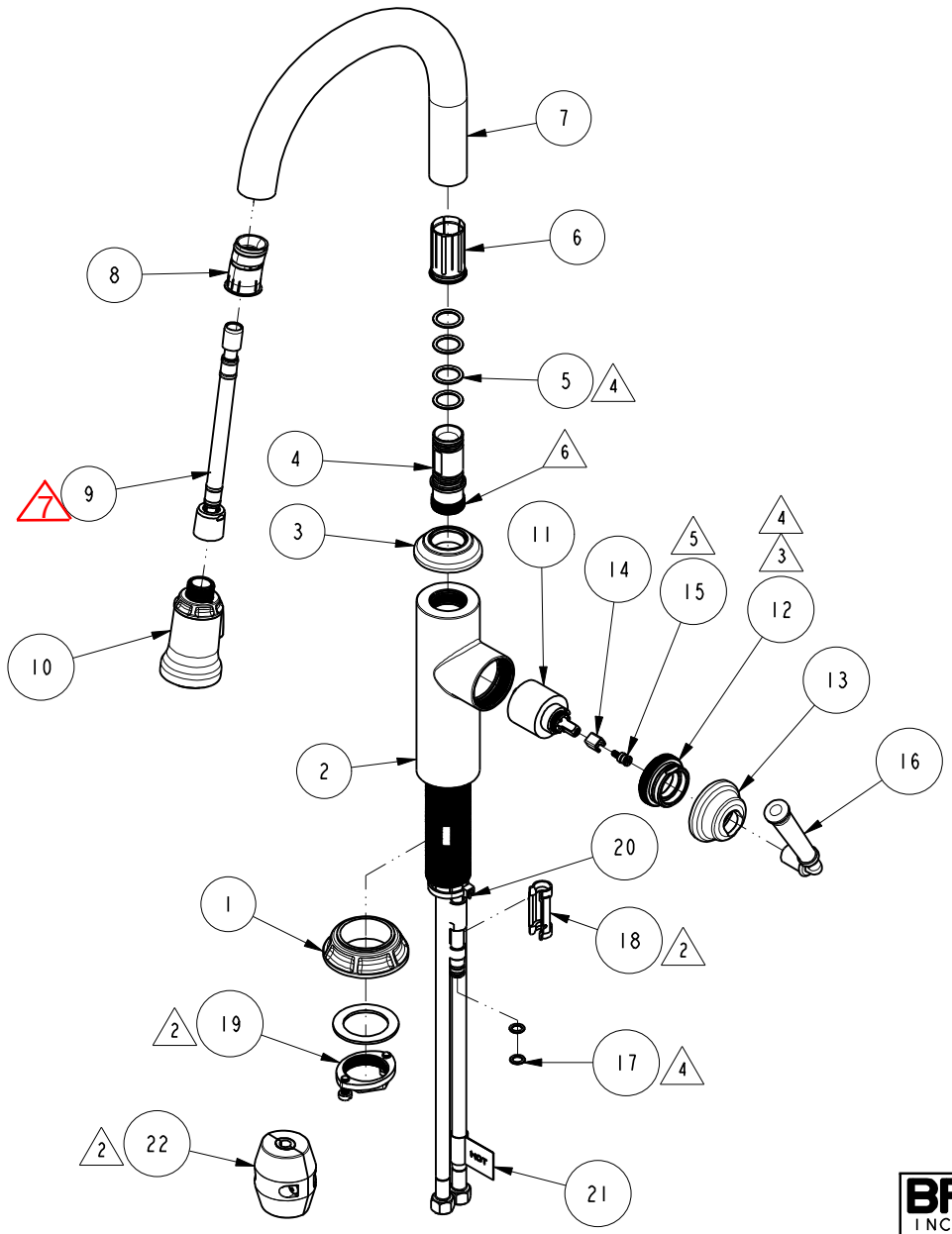

BRASSTECH INCORPORATED

2001 E. CARNEGIE AVE.
SANTA ANA, CA 92705
(949) 417-5207

DWG NO.	REV
3210-5203	B

SCALE	REF.	SHEET
.175	-	2 OF 3

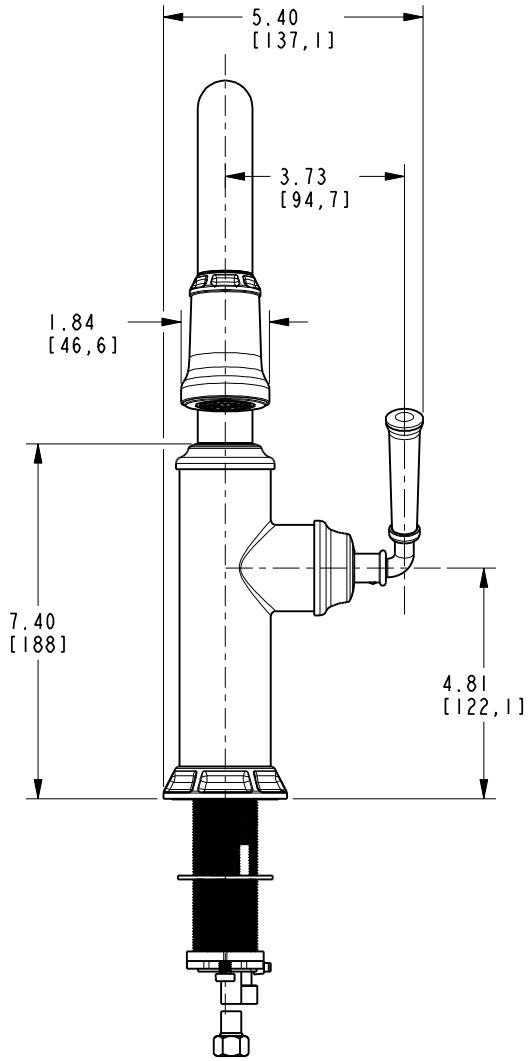

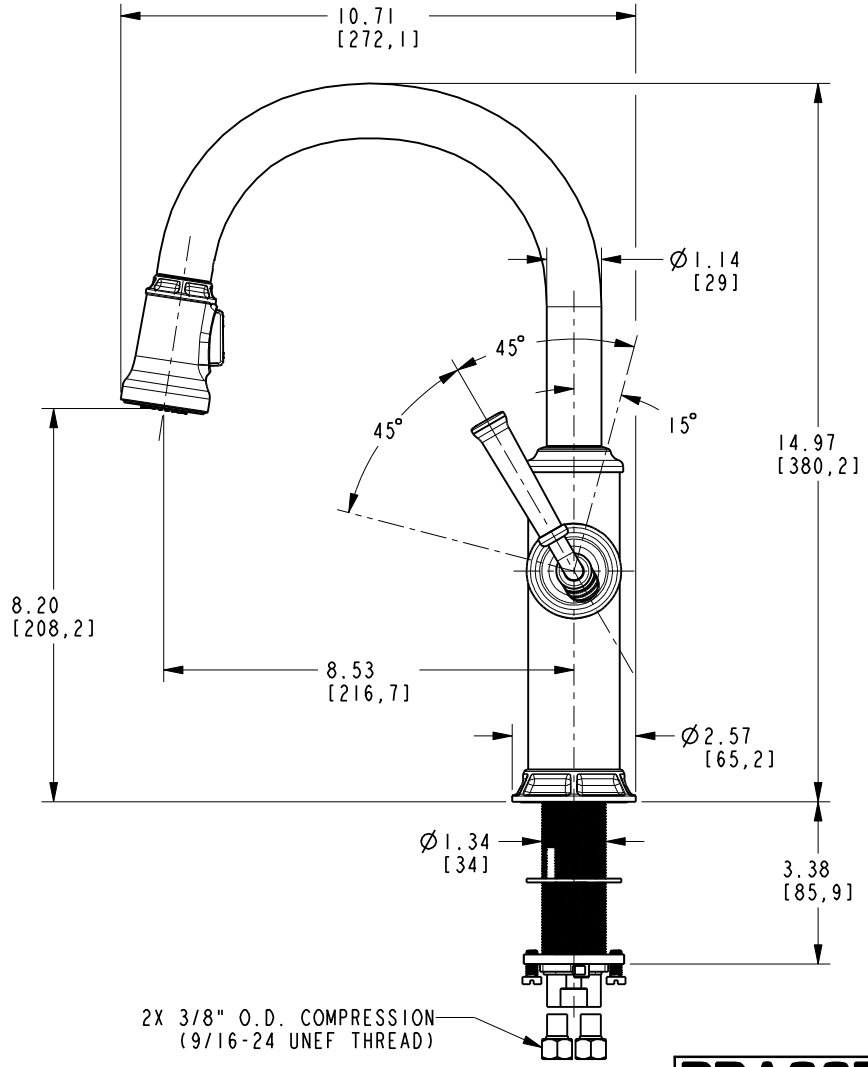

BRASSTECH INCORPORATED

2001 E. CARNEGIE AVE.
SANTA ANA, CA 92705
(949) 417-5207

DWG NO.	REV
3210-5203	B

SCALE	REF.	SHEET
.250	-	3 OF 3