AXOR

AXOR Citterio
Single-Hole Faucet 90 with Pop-Up Drain- Rhombic Cut, 1.2 GPM
Finishes : Part no. : **39001341**

Features

- Consists of: Single-handle faucet, Pop-up assembly
- Spray modes: Laminar spray
- Angle-adjustable spray
- Flow: 1.2 GPM (4.5 L/Min)
- Ceramic cartridge
- Includes pop-up drain

Item details

List Price

Technology

EcoRight · Comfort Zone · Quick Clean

Design awards

iF DESIGN AWARD 2021

Compliance

ADA · WaterSense Meets EPA Criteria · UPC C ®

Product image
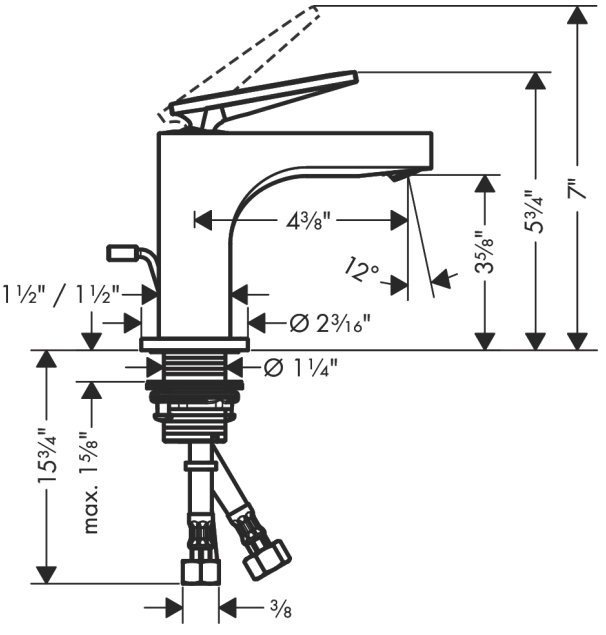
Scale drawing