AXOR

AXOR Citterio
Kitchen Faucet Select 2-Spray Pull-Out with sBox, 1.75 GPM
Finishes : **chrome** Part no. : **39862001**

Description

Features

- Swivel range 110° / 150°
- Laminar and needle spray
- Toggle spray diverter
- Select button provides convenient start/stop of the water flow at the sprayhead
- MagFit magnetic sprayhead docking
- Single-hole installation
- Flow: 1.75 GPM (6.6 L/Min)
- Ceramic cartridge
- ⅜" hoses
- Integrated double backflow prevention
- For smooth, protected hose guidance in the cabinet; extension length up to 30" (76cm)
- sBox

Technology

Product image
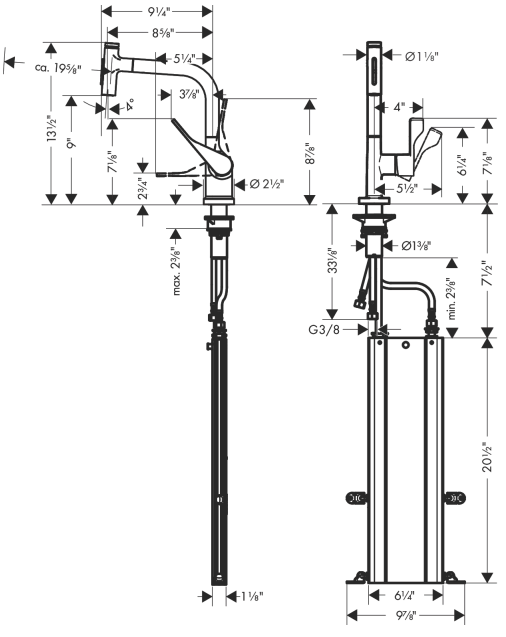
Scale drawing