AXOR

AXOR One
Freestanding Tub Filler Trim with 1.75 GPM Handshower
Finishes : Part no. : **48441251**

Features

- Consists of: Freestanding tub filler trim, Handshower, Handshower hose, Handshower holder
- Spray type mixer: Aerated spray
- Spray type hand shower: PowderRain
- Flow: 5.31 GPM (20.1 L/Min)
- Flow rate of hand shower at 3 bar: 1.75 GPM (6.6 L/Min)
- Ceramic cartridge
- Diverter with automatic resetting
- Integrated double backflow prevention

Item details

List Price

Technology

AirPower

Compliance

WaterSense Meets EPA Criteria Certified by IAPMO R&T

UPC C ®

Product image
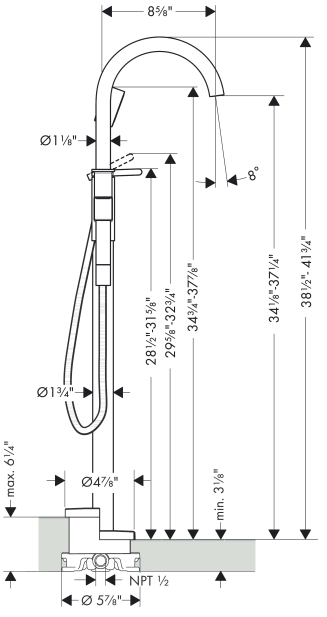
Scale drawing