hansgrohe

Logis
Widespread Faucet 150 with Pop-Up Drain, 1.2 GPM
Finish: **Matte Black** Part no. : **71533671**

Description

Features

- Consists of: Widespread faucet, drain valve set
- Handle design: lever handle
- Spray pattern: Aerated spray
- Maximum flow rate (at 3 bar): 4.5 l/min
- Ceramic valves hot/cold 90°

Item details

List Price	$ 490.00

Technology

EcoRight
Comfort Zone

Compliance / Sustainability

ADA
WaterSense Meets EPA Criteria Certified by IAPMO R&T
UPC C ®

Product image
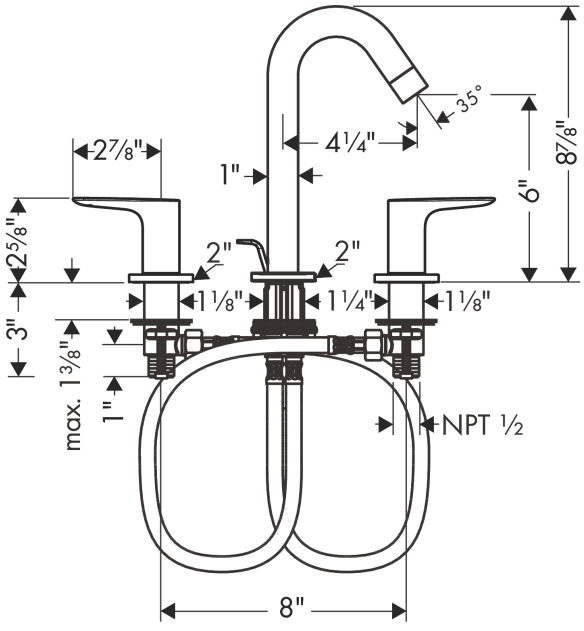
Scale drawing