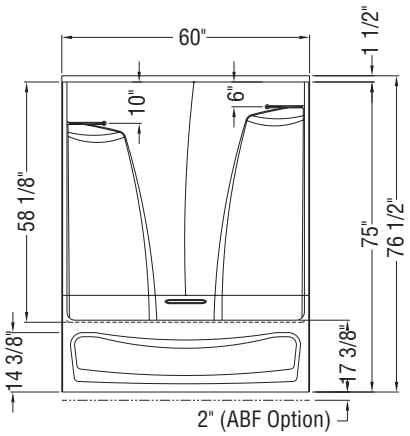
60"
1 1/2"
10"
6"
58 1/8"
75"
76 1/2"
14 3/8"
17 3/8"
2" (ABF Option)

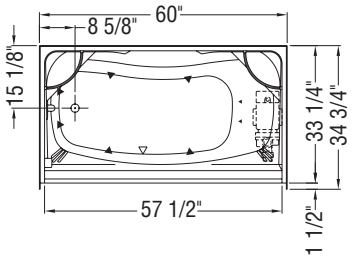
60"
8 5/8"
15 1/8"
33 1/4"
34 3/4"
57 1/2"
1 1/2"

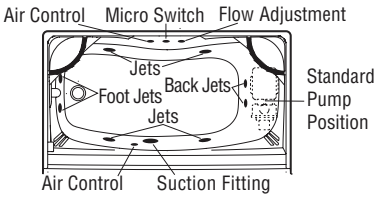
Air Control
Micro Switch
Flow Adjustment
Jets
Back Jets
Foot Jets
Jets
Standard Pump Position
Air Control
Suction Fitting