COVE COLLECTION

CRAFT + MAIN™

FRAMELESS NEO-ANGLE SHOWER DOOR

Model #: CVNA0474-CL-BN

FITS CENTERLINE 16-1/2" x 24" x 16-1/2" & 74"H



Clear Glass

Brushed Nickel Finish

1/4" tempered safety glass

An anodized aluminum frame

Stylish 8" back-to-back handle

Easy installation - no cutting necessary

Full length magnetic strike for ultimate water seal

Reversible left or right hand swing

Convenient 71-5/8" walk through height

Sizing to coordinate with most
36" Neo-Angle bases

H2OFF® Clean Glass Technology is applied
to the inside surface of the glass
Backed by a 5-Year Warranty



Clear



Brushed Nickel

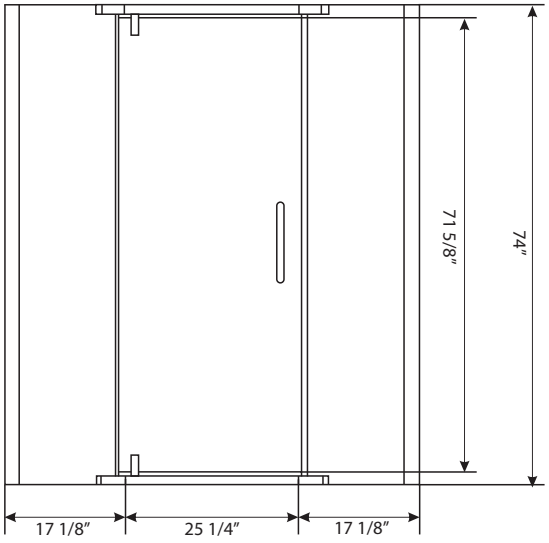

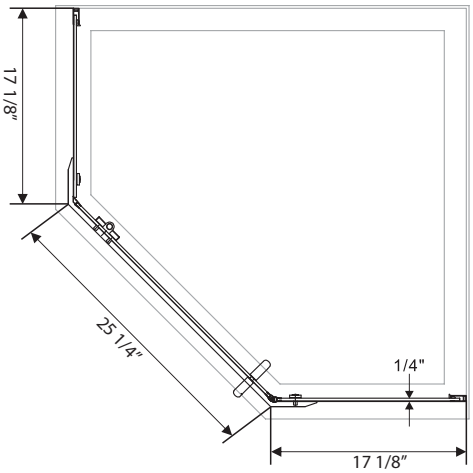

© 2022 FGI Industries, Ltd. | CRAFT + MAIN™, H2OFF® and logo designs are trademarks or registered trademarks of FGI Industries, Ltd.
USA: www.craftandmain.com | CANADA: www.craftandmain.ca