COVE COLLECTION

CRAFT + MAIN™

FRAMELESS NEO-ANGLE SHOWER DOOR

Model #: CVNA0674-CL-SV

FITS CENTERLINE 23-1/8" x 24-3/8" x 23-1/8" & 74"H



Clear Glass

Silver Finish

1/4" tempered safety glass

An anodized aluminum frame

Stylish 8" back-to-back handle

Easy installation - no cutting necessary

Full length magnetic strike for ultimate water seal

Reversible left or right hand swing

Convenient 71-5/8" walk through height

Sizing to coordinate with most
42" Neo-Angle bases

H2OFF® Clean Glass Technology is applied
to the inside surface of the glass
Backed by a 5-Year Warranty



Clear

Silver

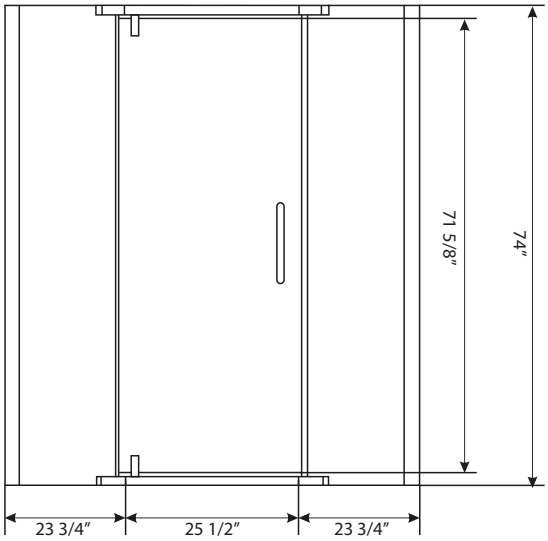

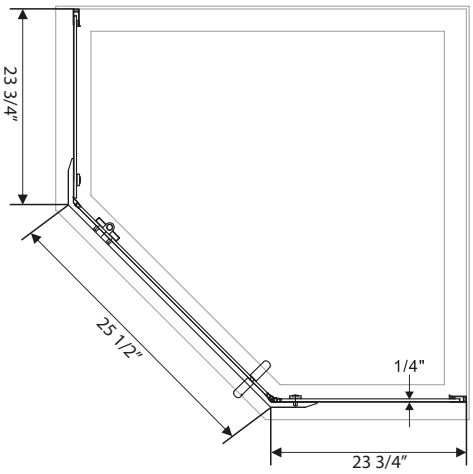

© 2022 FGI Industries, Ltd. | CRAFT + MAIN™, H2OFF® and logo designs are trademarks or registered trademarks of FGI Industries, Ltd.
USA: www.craftandmain.com | CANADA: www.craftandmain.ca