NATIVE TRAILS

SPECIFICATIONS

TRIP LEVER BATH WASTE & OVERFLOW

Bathtub

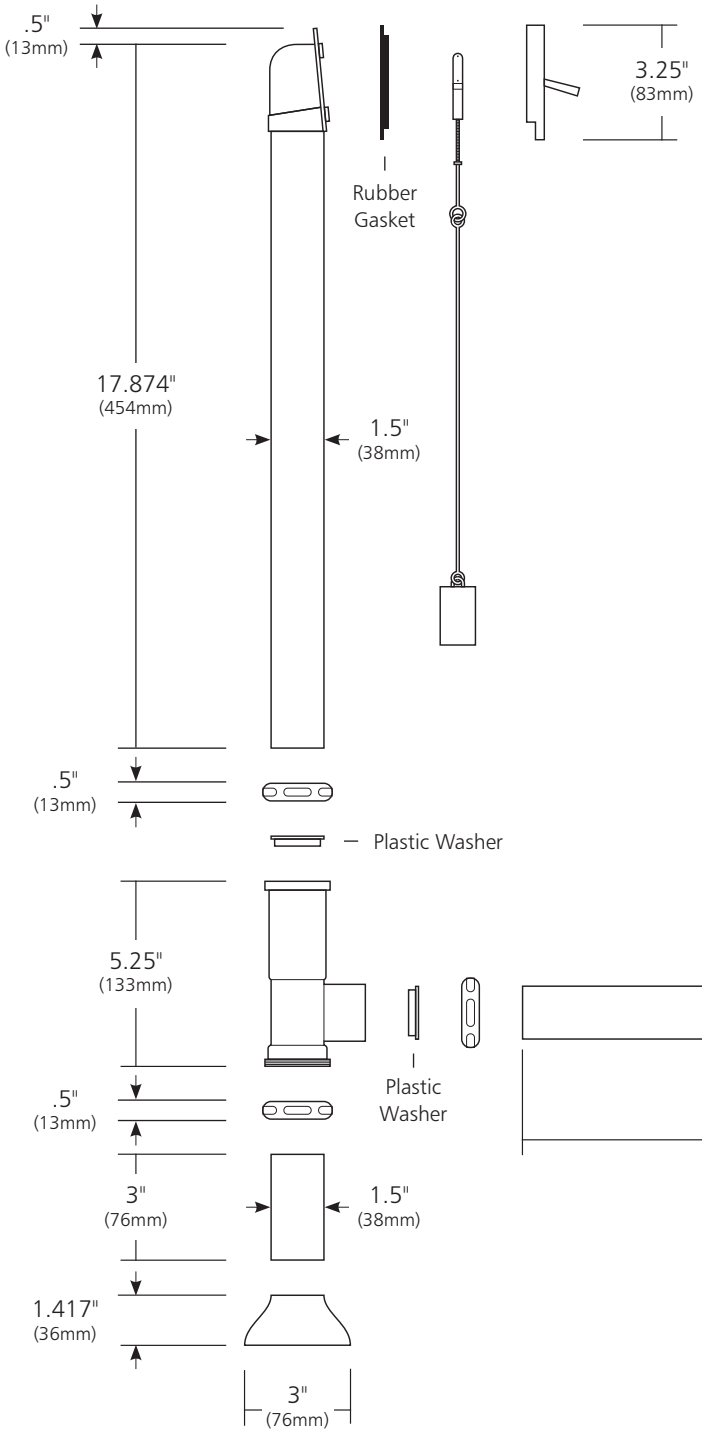

DR280-BN Brushed Nickel
DR280-ORB Oil Rubbed Bronze

PRODUCT DETAILS

- Features brass waste shoe with extended tube
- Fully plated for exposed plumbing

COORDINATING PRODUCTS

- Use for single walled tubs (Aurora, etc.)

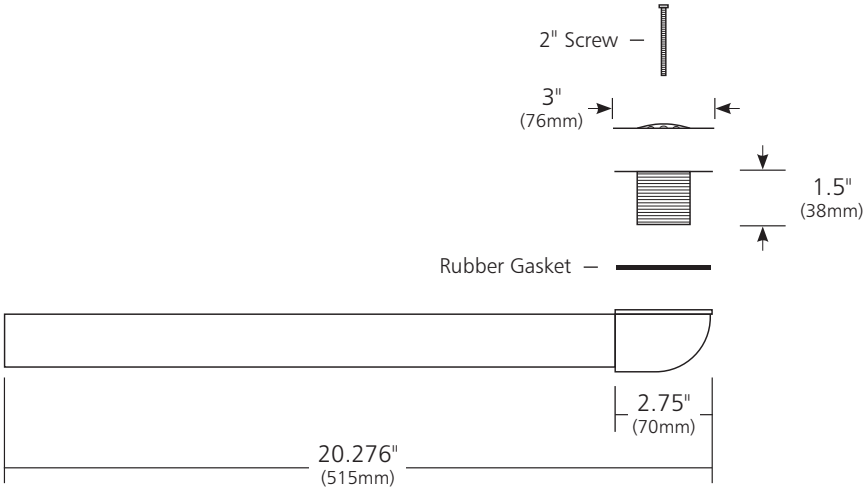

Tel: 800.786.0862 | Fax: 805.546.8248 | mail@nativetrails.net | www.nativetrails.net