Location:

SYMMONS® Elm®

Lavatory Faucet *SLC-5512-1.5*

Specifications Submittal

Model Numbers

- ☐ SLC-5512-1.5 Centerset Lavatory Faucet with pop-up drain assembly

Options / Modifications

Append appropriate -suffix to model number

- ☐ CG -0.5-NA 0.5 gpm (1.9 L/min) flow rate restrictor
- ☐ CG -1.0 1.0 gpm (3.8 L/min) flow rate restrictor
- ☐ -RB Add red and blue indicators to the handle (Available in chrome only)

Finish Options / Modifications

Append appropriate -suffix to model number

- ☐ -STN Satin Nickel
- ☐ -SBZ Seasoned Bronze
- \- Polished Chrome (standard finish)

Feature Highlights

- 4 inch centerset lavatory faucet with lever handles
- Commercial grade 1/4 turn ceramic disc valve cartridge for drip free performance
- Pop-up drain assembly with lift rod
- 1/2 inch IPS shanks
- Standard flow rate is 1.5 gpm (5.7 L/min)
  Optional lower flow rate restrictor available
- Polished chrome finish (standard)

Standards / Certifications

- ASME A112.18.1/ CSA B125.1
- Low lead compliant, AB1953/S.152/S.3874
- WaterSense® Certified (1.0 gpm & 1.5 gpm)
- Americans with Disabilities Act (ADA) compliant

Warranty

- Limited Lifetime - to the original end purchaser in consumer installations
- 5 years - for commercial installations

Dimensions Elm Centerset Lavatory Faucet, *SLC-5512-1.5*

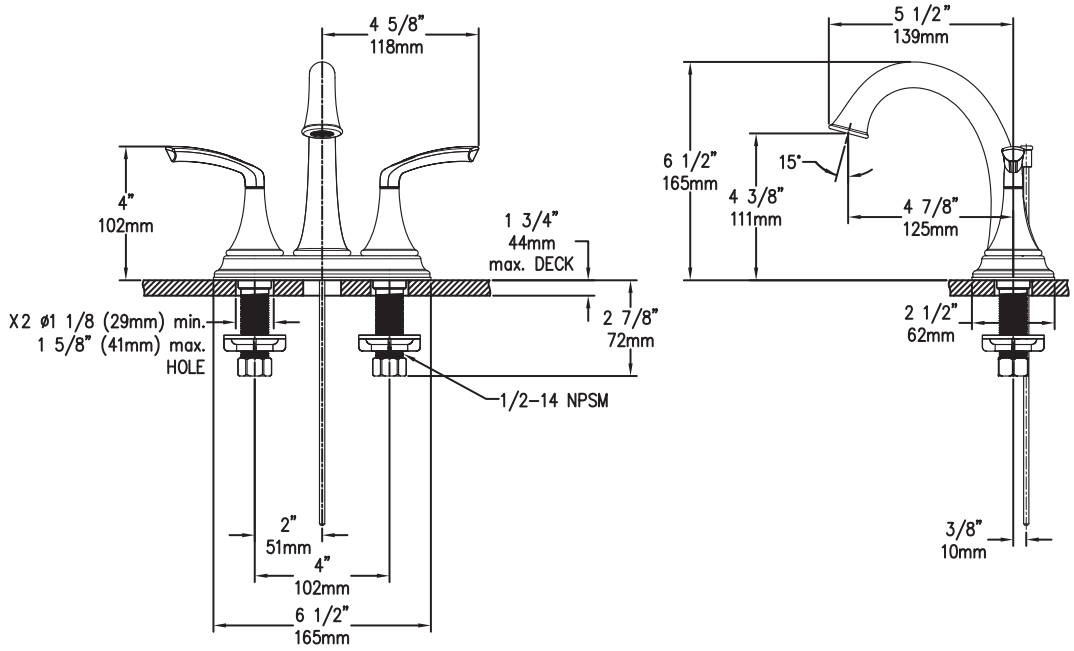

Symmons Industries, Inc. ▪ 31 Brooks Drive Braintree, MA 02184 ▪ Phone: (800)796-6667 ▪ Fax: (800) 961-9621
Copyright © 2019 Symmons Industries, Inc. ▪ symmons.com ▪ gethelp@symmons.com ▪ ZV-1968 REV A ▪ 120619