ELKAY SPECIFICATIONS

Quartz Luxe® 33" x 19" x 9" Single Bowl Undermount Workstation Sink Kit with Perfect Drain

Model(s) ELXRU13322W

PRODUCT SPECIFICATIONS

Quartz Luxe® 33" x 19" x 9" Single Bowl Undermount Workstation Sink Kit with Perfect Drain. Proprietary manufacturing process that combines natural quartz with high performance UV-stable acrylic resins results in an impact resistant, nonporous and heat-, scratch-, stain- and fade-resistant surface. Naturally sound deadening and Center Left drain placement.

Installation Type:	Undermount
Material:	Quartz
Special Features:	Workstation|SurePrep™|Perfect Drain
Finish:	Arctic Fox (FX), Caviar (CA), Charcoal (CH), Chestnut (CN), Obsidian (DN), Ricotta (RT), Sandstone (SN), Silvermist (SM)
Number of Bowls:	1
Sink Dimensions:	33" x 19" x 10-7/8"
Bowl 1 Dimensions:	30-3/4" x 17-1/16" x 9-1/2"
Drain Size:	3-5/8" (92mm)
Drain Location:	Center Left
Minimum Cabinet Size:	36"
Cutout Template #:	2000001753

Template is available for download at elkay.com. CAD software will be required to open the template.

Special Note: Reserve Selection products are sold exclusively, in-store and online, through authorized wholesalers.

Perfect Drain: Seamlessly molded collar eliminates the gap between a traditional drain and the sink for a more sanitary and gap free installation. Select garbage disposers can be installed on either sink bowl for user convenience. Please see our Garbage Disposer Compatibility Guide.

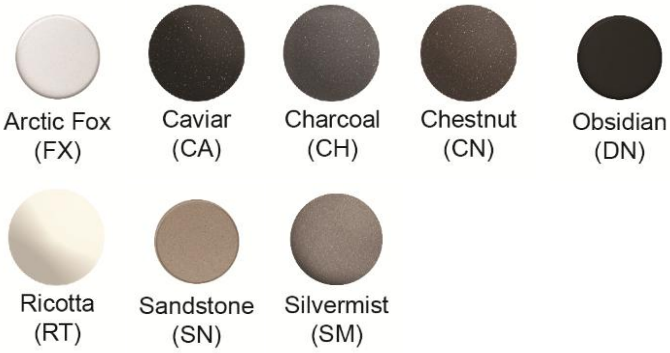

Included with Product: **LKQLOBG2813SS Grid, LKCB1217XAC Cutting Board, LKQLDSCGR Shelf, LKC0717SS Colander, LKQLDR1117RUGR & LKDR0717SS Drying Racks, Drains and LKCLKIT**

A Century of Tradition and Quality.
For more than 100 years, Elkay has been making innovative products and providing exceptional customer care. We take pride in offering plumbing products that make life easier, inspire change and leave the world a better place.

KBB READERS' CHOICE AWARDS 2025 WINNER

Product Compliance: CSA B45.8/IAPMO Z403
Accessory: ASME A112.18.2/CSA B125.2

Clean and Care Manual (PDF)
Installation Instructions (PDF) - 1000005238
Warranty (PDF)

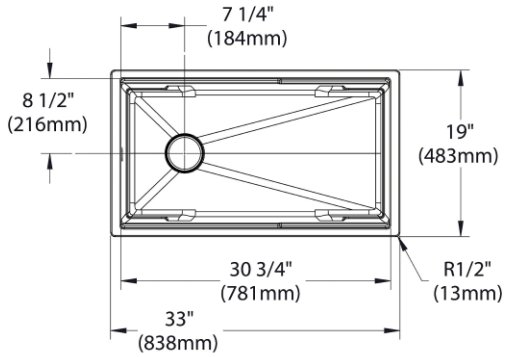

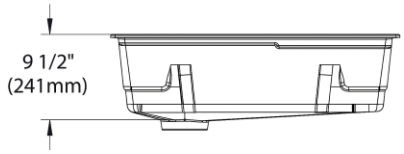

PART:_____QTY: _____
PROJECT:_____
CONTACT:_____
DATE:_____
NOTES:_____
APPROVAL:_____

In keeping with our policy of continuing product improvement, Elkay reserves the right to change product specifications without notice. Please visit elkay.com for the most current version of Elkay product specification sheets. This specification describes an Elkay product with design, quality, and functional benefits to the user. When making a comparison of other producers' offerings, be certain these features are not overlooked. Latest version of the spec sheet available: https://www.elkayfiles.com/spec-sheets/ELXRU13322W_spec.pdf

Installation Profile:

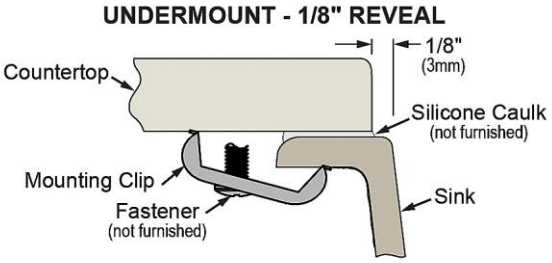

Designed to affix to the underside of any solid surface countertop.

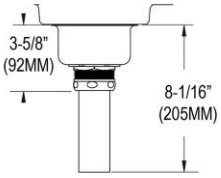

Sink with Drain Kit Installed

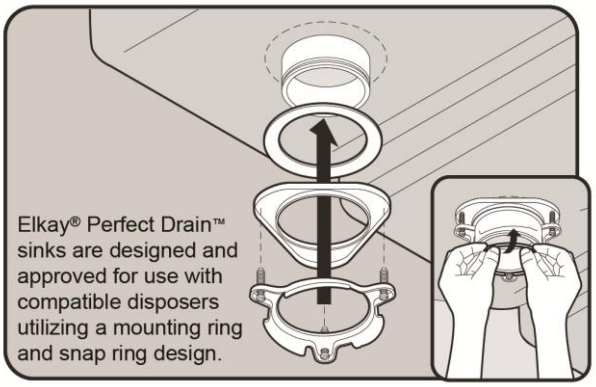

In keeping with our policy of continuing product improvement, Elkay reserves the right to change product specifications without notice. Please visit elkay.com for the most current version of Elkay product specification sheets. This specification describes an Elkay product with design, quality, and functional benefits to the user. When making a comparison of other producers' offerings, be certain these features are not overlooked. Latest version of the spec sheet available: https://www.elkayfiles.com/spec-sheets/ELXRU13322W_spec.pdf