KALLISTA

Foundations by KALLISTA
1/2" Thermostatic Mixing Valve
P29511-WS

Features
- A selection of products within this collection is in stock and ready to ship. Please visit kallista.com/resources#ReadyToShip for the complete list of Ready-to-Ship products and finishes
- Brass valve bodies
- Single-handle temperature control
- High-temperature limit setting for added safety
- Temperature-balancing mechanism
- Integral stops
- Crossflow prevention
- Wall-mount installation



Recommended Products/Accessories
P25022-CR Script Thermostatic Trim, Cross Handle
P24922-ULB Thermostatic Shower Trim, Lever Handle
P24622-LV Thermostatic Trim, Lever Handle
P29528-00 3/4" Volume Control Rough-In Assembly

Codes/Standards
ASME A112.18.1/CSA B125.1
ASSE 1016
NOM Standards
NOM 012-CONAGUA

KALLISTA® Five-Year Limited Warranty
See website for detailed warranty information.

KALLISTA

Foundations by KALLISTA
1/2" Thermostatic Mixing Valve
P29511-WS

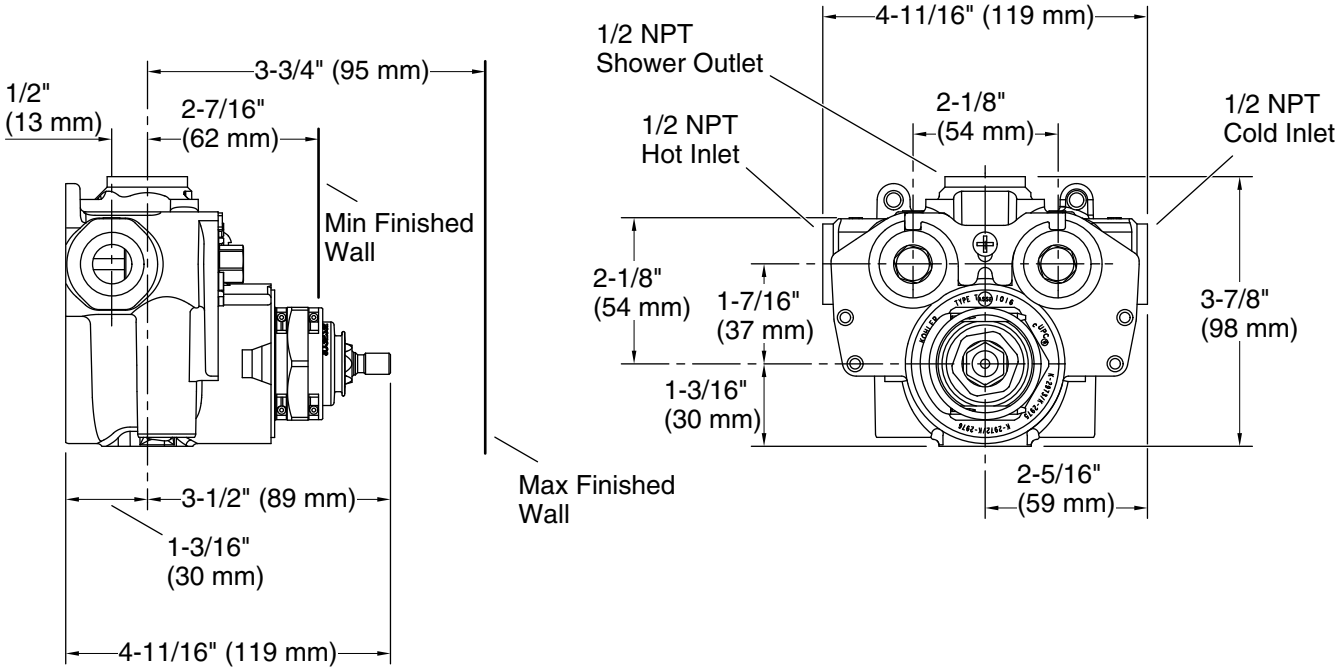

Technical Information
All product dimensions are nominal.