KALLISTA®

# Foundations by KALLISTA
## Thermostatic Shower Trim Rough In
## P32995-00

### Features
- Brass valve body
- Single-handle temperature control
- Features a high-temperature-limit stop to help prevent scalding
- 3/4" female NPT inlet connections
- Includes rough-in
- Integral shut-off valve stops
- 12 gpm (45.4 lpm) maximum flow rate at 45 psi (3.1 bar)



### Recommended Products/Accessories
P33491-LV Aileron™ Thermostatic Trim
P33358-00 Bezel™ Thermostatic Trim

### Codes/Standards
ASME A112.18.1/CSA B125.1
ASSE 1016/ASME A112.1016/CSA B125.16

### KALLISTA® Five-Year Limited Warranty
See website for detailed warranty information.

KALLISTA

# Foundations by KALLISTA

## Thermostatic Shower Trim Rough In

P32995-00

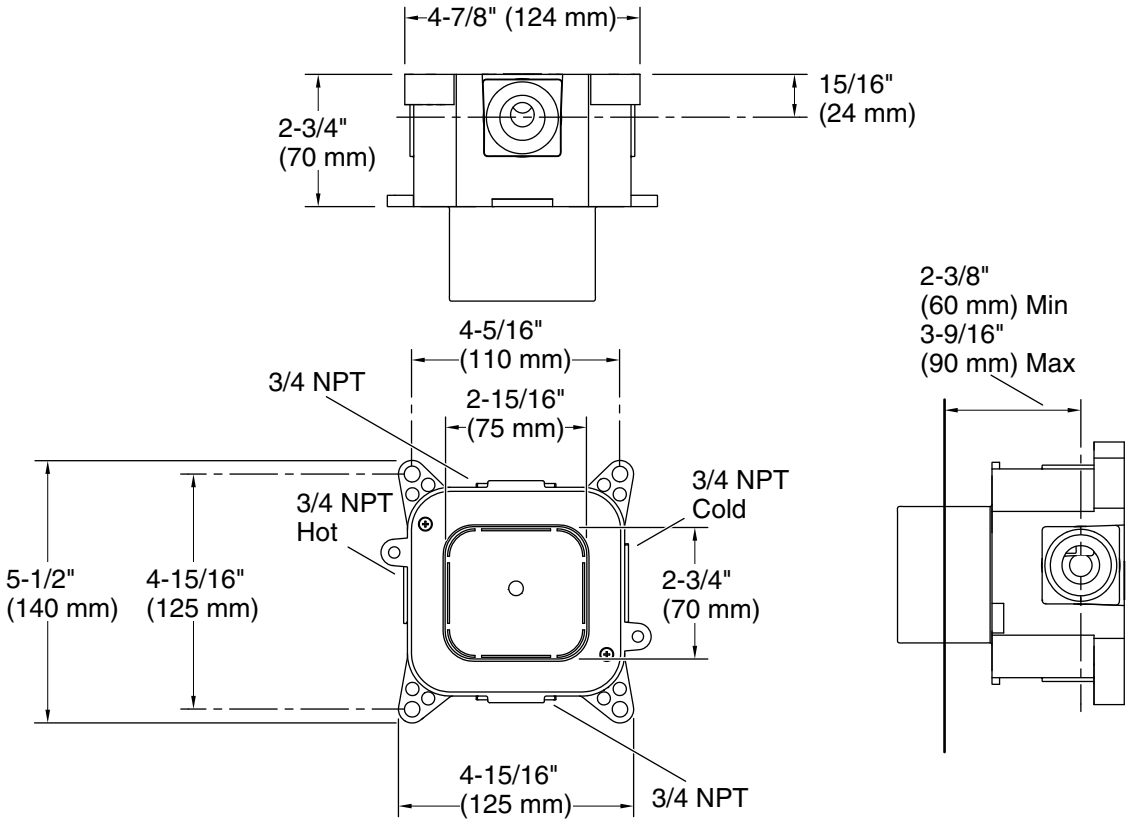


### Technical Information

All product dimensions are nominal.

### Shower Valve:

| | |
|---|---|
| Flow Rate (Max) @ 45 psi | 12 gal/min (45.4 l/min) |
| Manufacturer's minimum rated flow: | 1.75 gal/min (6.6 l/min) |
| Pressure: | 45 psi (3.1 bar) |
| Maximum (Static) Pressure: | 125 psi (8.6 bar) |
| Minimum (Operating) Pressure: | 15 psi (1 bar) |

### Notes

Follow the installation dimensions precisely as there is no deep roughing in kit available for this product

For use with showerheads or handsprays rated at 1.75 gal/min (6.6 l/min) or higher.