# Maris Lario Prep Faucet - LAR-PR-SNI | 115.0740.015

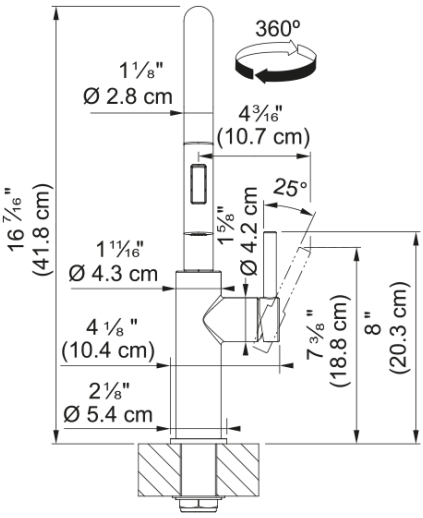


Maris Lario 16.5-in Single Handle Pull-Down Dual-Spray Prep Faucet in Satin Nickel. Compact and efficient, the Maris Lario Prep Faucet is the perfect solution for smaller sinks or dedicated prep areas. Designed in Italy with a focus on both elegance and durability, it delivers precise water flow for delicate tasks through its versatile dual function pull-down spout. Available in Chrome, Satin Nickel, and Matte Black, this faucet brings a refined touch to any kitchen space while offering reliable performance. A premium laminar aerator delivers a smooth splash free water stream. This faucet is part of the complete Maris Lario collection, which includes kitchen, prep, bar, pot filler, and filtration faucets, all designed to integrate seamlessly and complement other Franke products, ensuring a harmonious aesthetic throughout the home.

---

| | |
|---|---|
| **Aspect** | |
| Spout type | J - spout |
| Product color | Satin Nickel |
| Type of material | Brass |
| Flexible pullout hose material | Nylon black |
| Spray head material | Stainless steel |
| **Product Dimensions** | |
| Height Overall | 16.024 |
| Faucet hole diameter | 35 mm |
| Cartridge dimension | 35 mm |
| **Installation** | |
| Mounting type | Shank |
| Water supply hose connection | 1/2" |
| Water supply hose length | 17.72 in |
| **Product specifications** | |
| Pressure | High pressure |
| Faucet type | Spray |
| Faucet operation | Side lever |
| Faucet rotation | 360° |
| **Product identification** | |
| Brand | FRANKE |
| Product family | Maris |
| Collection | Maris Lario |

**Features**

| | |
|---|---|
| Water saving feature | No |
| Type of aerator | Laminar |