# PATIENCE™
## TWO-HANDLE THERMOSTAT

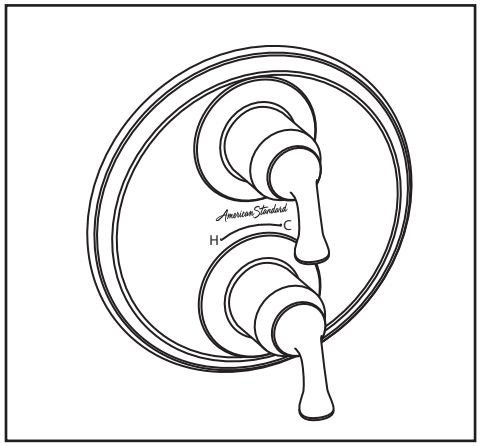


## MODEL NUMBER:

**TRIM KIT:**

❏ **T106.740 Two-Handle Thermostat Trim Kit**
With separate volume control. LESS Valve.

**ROUGH VALVES:**

**TEMPERATURE & ON/OFF VOLUME CONTROL ONLY**

❏ **R520 Rough Valve Body only**
1/2" NPT inlets/outlets. With separate volume control. LESS Trim.

❏ **R540 Rough Valve Body only**
3/4" NPT inlets/outlets. With separate volume control. LESS Trim.

**TEMPERATURE & ON/OFF VOLUME CONTROL & BUILT-IN DIVERTER**

❏ **R522 Rough Valve Body only**
1/2" NPT inlets/outlets. With separate volume control and built-in 2-way diverter. LESS trim.

❏ **R523 Rough Valve Body only**
1/2" NPT inlets/outlets. With separate volume control and built-in 3-way diverter. LESS trim.

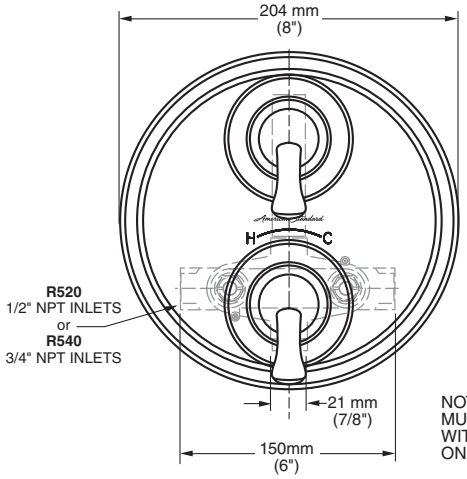


NOTE: FITTING MUST BE INSTALLED WITH VOLUME CONTROL ON TOP.

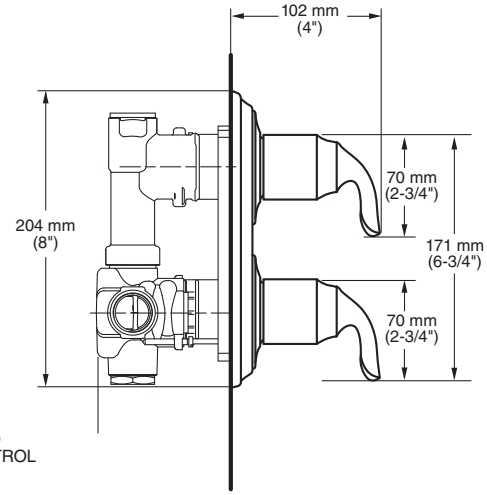


## GENERAL DESCRIPTION:

Cast brass valve body. The single unit contains two handles, the bottom lever handle sets the desired temperature and the top handle functions as an on/off, volume control. The temperature is maintained by a wax element moving a shuttle valve between hot and cold. The volume is controlled by twin ceramic disc valve cartridges. Ceratherm includes Hot Limit Safety Stop. Escutcheon plate is stamped brass. Available with 1/2" or 3/4" NPT inlets and outlets. The valve has a high flow rate, ideal for mutiple outlet installations.

ADA

ADA COMPLIANT

## PRODUCT FEATURES:

**Brass Casting:** Highest quality faucet material for durability & long life.

**Wax Thermostatic Unit:** Permits shuttle valve to move between the hot and cold seat to maintain the pre-selected constant water temperature.

**Back to Back Capable:** Hot and cold can be reversed.

**Spring-Loaded Check Valves:** When the hot and cold water enters the fitting, both supplies pass through the spring-loaded check valves to prevent cross flow of hot and cold water.

**Integrated Stop Valves:** Ensure easy cleaning and servicing.

**Adjustable Hot Limit Safety Stop:** Limits the amount of hot water allowed to mix with cold. Reduces the risk of accidental scalding.

## SUGGESTED SPECIFICATION

Two-handle Thermostat shall feature a cast brass valve body. Thermostat shall be a wax element shuttle valve. Shall also feature ceramic disc valving, 1/2" NPT or 3/4" NPT inlets and outlets. Fitting shall be American Standard Model # T106.740.___ (Trim Kit) and R52_ or R540 (Rough Valve).

© 20167 AS America, Inc.

# PATIENCE™
## TWO-HANDLE THERMOSTAT

## CODES AND STANDARDS

These products meet or exceed the following codes and standards:

**ASSE 1016**
**ASME A112.18.1**
**CSA B125.1**

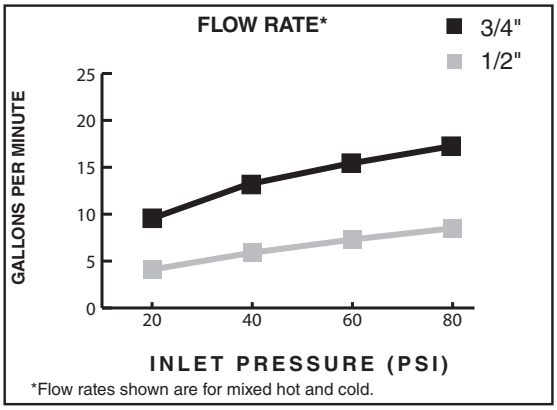


| TRIM KITS ** | ** TRIM & ROUGH MUST BE ORDERED SEPARATELY. | | Finish Options | | |
|---|---|---|---|---|---|
| | | Polished Chrome | Polished Nickel | Legacy Bronzed | PVD Brushed Nickel |
| **Product Number** | **Description** | 002 | 013 | 278 | 295 |
| T106.740* | Two-handle Thermostat Trim Kit with separate volume control. ADA | | | | |

| ROUGH VALVE BODIES | |
|---|---|
| **Product Number** | **Description** |
| R520* | Rough Valve Body less trim - 1/2" NPT Inlets/Outlets. With separate volume control only. LESS trim. |
| R540* | Rough Valve Body less trim - 3/4" NPT Inlets/Outlets. With separate volume control only. LESS trim. |
| R522 | Rough Valve Body less trim - 1/2" NPT Inlets/Outlets. With separate volume control and built-in 2-way diverter. LESS trim. |
| R523 | Rough Valve Body less trim - 1/2" NPT Inlets/Outlets. With separate volume control and built-in 3-way diverter. LESS trim. |

***NOTE:** When used as a Bath/Shower a separate diverter valve is required (such as R420 or R430).
**Requires twin ell (must be ordered separately) for use with diverter spouts.**

ADA Meets the American Disabilities Act Guidelines and **ANSI A117.1** Requirements for the physically challenged.

PART OF LIXIL

© 2017 AS America, Inc.